Polo 1995 ➤

1AV fuel injection and ignition system (4-valve)									
Engine ID	AFH								

Edition 04.1996

Protected by copyright. Copying for private or commercial purposes, in part or in whole, is not permitted unless authorised by Volkswagen AG. Volkswagen AG does not guarantee or accept any liability with respect to the correctness of information in this document. Copyright by Volkswagen AG.

satelettronica

List of Workshop Manual Repair GroupsList of Workshop Manual Repair GroupsList of Workshop Manual Repair Groups

Polo 1995 ➤

1AV fuel injection and ignition system (4-valve)

Repair Group

01 - Self-diagnosis

24 - Mixture preparation, Injection

28 - Ignition system

Protected by copyright. Copying for private or commercial purposes, in part or in whole, is not permitted unless authorised by Volkswagen AG. Volkswagen AG does not guarantee or accept any liability with respect to the correctness of information in this document. Copyright by Volkswagen AG.

satelettronica

Technical information should always be available to the foremen and mechanics, because their careful and constant adherence to the instructions is essential to ensure vehicle road-worthiness and safety. In addition, the normal basic safety precautions for working on motor vehicles must, as a matter of course, be observed.

All rights reserved.
No reproduction without prior agreement from publisher.

Copyright © 2010 Volkswagen AG, Wolfsburg

Contents

01 - Self-diagnosis . . . 1

1 **Self diagnosis** . . . 1
1.1 Self diagnosis . . . 1
1.2 Features of self-diagnosis . . . 1
1.3 Technical data of self diagnosis . . . 1
1.4 Connecting fault reader V.A.G 1551 and selecting engine control unit . . . 2
1.5 Interrogating and erasing fault memory . . . 3
1.6 Fault table . . . 5
1.7 Final control diagnosis . . . 9
1.8 Read measured value block and basic settings . . . 14
1.9 Display group overview . . . 14

24 - Mixture preparation, Injection . . . 18

1 **Servicing injection system** . . . 18
1.1 Servicing injection system . . . 18
1.2 Fitting locations overview . . . 18
1.3 General notes on injection . . . 21
1.4 Removing and installing parts of the injection system . . . 22
1.5 Dismantling and assembling fuel manifold with injectors . . . 28
1.6 Dismantling and assembling intake manifold . . . 30
1.7 Dismantling and assembling air cleaner . . . 33
1.8 Safety precautions . . . 36
1.9 Rules for cleanliness . . . 36
1.10 Technical data . . . 36
1.11 Performing basic setting . . . 37
1.12 Checking Lambda probe and Lambda control . . . 38
1.13 Checking Lambda probe heating . . . 40
1.14 Checking engine operating mode . . . 41
1.15 Checking throttle valve control part . . . 43
1.16 Checking intake manifold pressure sender . . . 49
1.17 Checking speed signal . . . 51
1.18 Checking coolant temperature sender . . . 53
1.19 Checking intake air temperature sender . . . 56
1.20 Checking control unit voltage supply . . . 58
1.21 Matching engine control unit to electronic immobilizer . . . 60
1.22 Checking air conditioner and air conditioner compressor signals . . . 61
1.23 Checking injectors . . . 62
1.24 Checking fuel pressure regulator and holding pressure . . . 64
1.25 Checking intake air system for leaks (unmetered air) . . . 66
1.26 Checking intake air preheating . . . 67
1.27 Wire routing engine wiring loom . . . 68

28 - Ignition system . . . 70

1 **Servicing ignition system** . . . 70
1.1 Servicing ignition system . . . 70
1.2 General notes to ignition system . . . 70
1.3 Removing and installing parts of the ignition system . . . 71
1.4 Dismantling and assembling distributor . . . 74
1.5 Safety precautions . . . 75
1.6 Adjustment data, Spark plugs . . . 75
1.7 Checking and adjusting ignition timing . . . 75
1.8 Checking Hall sender . . . 76
1.9 Checking ignition transformer and output stage . . . 77
1.10 Checking knock sensor . . . 80

Protected by copyright. Copying for private or commercial purposes, in part or in whole, is not permitted unless authorised by Volkswagen AG. Volkswagen AG does not guarantee or accept any liability with respect to the correctness of information in this document.
Copyright by Volkswagen AG.
satelettronica

Protected by copyright. Copying for private or commercial purposes, in part or in whole, is not permitted unless authorised by Volkswagen AG. Volkswagen AG does not guarantee or accept any liability with respect to the correctness of information in this document. Copyright by Volkswagen AG.

satelettronica

01 - Self-diagnosis

1 - Self diagnosis

1.1 - Self diagnosis

Note:

The self-diagnosis monitors only a part of the injection and ignition system. For fault finding the binder "Fault finding engine" must also be used in every case.

1.2 - Features of self-diagnosis

The engine control unit (control unit for 1AV fuel injection and ignition system -J382) is equipped with a fault memory.

If faults occur in the sensors and components being monitored, they will be stored in the fault memory together with an indication of the type of fault.

Faults which only occur sporadically will have the addition "sporadic fault" on the print out. These faults will be indicated on the display by the addition "/SP". The cause of sporadic faults can be e.g. a loose contact or a brief open circuit. If a sporadic fault does not occur again within 40 engine starts, it will be erased from the fault memory.

The faults stored can be read-out with the fault reader V.A.G 1551 or the vehicle system tester V.A.G 1552 => Page 3 .

The fault memory must be erased after the faults has been eliminated => Page 3 .

Note:

General information for self-diagnosis is in the fault reader V.A.G 1551 and the vehicle system tester V.A.G 1552 instruction manuals.

1.3 - Technical data of self diagnosis

Equipped with

- The data transfer between control unit and fault reader V.A.G 1551 or vehicle system tester V.A.G 1552 is carried out in the operating mode "Rapid data transfer".
- The fault memory is equipped with a non-volatile memory.

Interrogating control unit versions

The control unit version is displayed when the fault reader V.A.G 1551 or the vehicle system tester V.A.G 1552 is connected and engine electronics control unit selected => Page 2 .

Selectable functions when using the fault reader V.A.G 1551 or V.A.G 1552

The prerequisites for selecting the desired functions can be taken from the following table.

Copyright by Volkswagen AG. Volkswagen AG does not accept any liability with respect to the correctness of information in this document. Copyright by Volkswagen AG. Reproduced by copyright permitted only for private or commercial purposes, in part or in whole, not permitted unless authorised by Volkswagen AG. Volkswagen AG does not guarantee
satelettronica

Function	Prerequisite	
	Engine stationary, ignition switched on	Engine running at idling speed
02 Interrogating fault memory	yes	yes
03 Final control diagnosis	yes	no
04 Basic setting	yes1)	yes2)3)
05 Erasing fault memory	yes	yes
06 Ending output	yes	yes
08 Read measured value block	yes	yes
09 Read individual measured value4)	yes	yes
10 Adaption	yes	no

1) Must be carried out after performing the following work:
Replacing control unit, throttle valve control part or engine.

2) Only possible when the coolant temperature is above 80 °C. Prior to this, this function is blocked.

3) Must be carried out when checking and adjusting the ignition timing point.

4) Currently is only used for checks in the factory.

1.4 - Connecting fault reader V.A.G 1551 and selecting engine control unit

Special tools, testers, measuring instruments and auxiliary items required

- Fault reader V.A.G 1551 with cable V.A.G 1551/3

Note:

The vehicle system tester V.A.G 1552 can be used instead of the fault reader V.A.G 1551, however a print-out is not possible.

Check conditions

- Battery voltage at least 11 V.

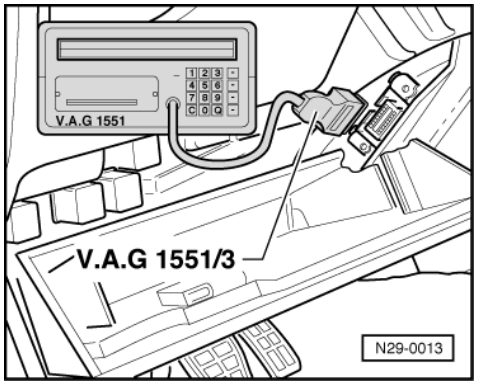

- Fuse No. 21 must be OK.

Protected by copyright. Copying for private or commercial purposes, part or in whole, is not permitted unless authorised by Volkswagen AG. Volkswagen AG does not guarantee or accept any liability with respect to the correctness of information in this document. Copyright by Volkswagen AG.
satelettronica

- Earth connections on front of clutch housing and on cylinder head OK.

Work sequence

- -> Fold driver's side stowage compartment down.
- Connect fault reader V.A.G 1551 with cable V.A.G 1551/3.

After the fault reader has been connected:

- Depending upon desired function:
  Switch on ignition
  or
  Start engine => Page 1 , Table "Selectable functions".

Notes:

- If the display remains blank, check diagnostic connector voltage supply =>Fault finding programme in "Current flow diagrams, Electrical fault finding and Fitting locations" binder
- If the display does not indicate as described in the work sequence:

=> Fault reader operating instructions

- If due to an input fault "Fault in the data transfer!" is displayed, pull wire off fault reader, reconnect and repeat work step.

-> Indicated on display:

```
V.A.G - SELF DIAGNOSIS     HELP
     1 - Rapid data transfer*
     2 - Flash code output*
```

* Appears alternately

- Operate fault reader taking into account the information on the display:
- Press key 1 for "Rapid data transfer".
- Press keys 0 and 1 for address word "Engine electronics" and confirm entry with Q key.

-> The fault reader V.A.G 1551 display will show the control unit identification, e.g.:

```
030906030
```

- 030 906 030 = Part No. of control unit
- Marelli 1AV = System designation and version
- 2051 = Programme level number

- Press ⇒ key.

-> Indicated on display:

```
Rapid data transfer      HELP
Select function XX
```

- Further measures see repair procedures.

1.5 - Interrogating and erasing fault memory

Special tools, testers, measuring instruments and auxiliary items required

- Fault reader V.A.G 1551 (or vehicle system tester V.A.G 1552) with cable V.A.G 1551/3

Work sequence

- Connect fault reader V.A.G 1551 (V.A.G 1552). Start engine and select "Address word" 01 of engine control unit. When doing this the engine must be running at idling speed.

Protected by copyright. Copying for private or commercial purposes, in part or in whole, is not permitted unless authorised by Volkswagen AG. Volkswagen AG does not guarantee or accept any liability with respect to the correctness of information in this document. Copyright by Volkswagen AG.
satelettronica

(Connecting fault reader and selecting engine control unit => Page 2 .)

Only when engine does not start:

- Switch ignition on.

- Switch on fault reader printer with the print key. The warning lamp in key must light up.

-> Indicated on display:

```
Rapid data transfer     HELP
Select function XX
```

- Operate fault reader taking into account the information on the display:
- Press keys 0 and 2 for the function "Interrogate fault memory" and confirm entry with Q key.

-> The number of faults stored or "No fault recognised!" will be shown on the display.

```
X Faults recognised!
```

If one or more faults are stored:

The stored faults will be displayed and printed out one after the other.

-> After the stored faults have been printed out, the display will show:

```
Rapid data transfer     HELP
Select function XX
```

- Press keys 0 and 5 for the function "Erase fault memory" and confirm entry with Q key.

Note:

If the ignition is switched off between "Interrogate fault memory" and "Erase fault memory" the fault memory will not be erased.

-> Indicated on display:

```
Rapid data transfer
Fault memory is erased!
```

- Press ⇒ key.
- Press keys 0 and 6 for the function "End output" and confirm entry with the Q key.
- Eliminate the printed out faults using the appropriate fault table.
  => Page 5 .

During test and assembly work faults can be recognised from other control units like e.g. plug disconnected. Therefore on completion the fault memories of all control units must be interrogated and erased. To do this:

- Press key 0 twice for address word "Automatic test sequence" and confirm entry with Q key. The V.A.G 1551 transmits all known address words one after the other.

When a control unit answers with its identification the number of stored faults appears on the display or "No fault recognised".

Any system faults that are stored will be displayed one after the other and printed out. The V.A.G 1551 will then transmit the next address word.

-> The automatic test sequence has ended when following is indicated on display:

```
V.A.G SELF-DIAGNOSIS    HELP
1 - Rapid data transfer*
2 - Flash code output*
```

- Erase all fault memories and then carry out a road test.

  During the road test the following operating conditions must be fulfilled:
  - The coolant temperature must exceed 80 °C .
  - When the temperature is reached, the operating conditions

Protected by copyright. Copying, distribution and publication not permitted without authorisation by Volkswagen AG. Volkswagen AG does not guarantee or accept any liability with respect to the correctness of information in this document. Copyright by Volkswagen AG.

satelettronica

Idling
Part throttle
Full throttle
Overrun
must be attained several times.
- At full throttle the speed must exceed 3500 rpm.

- Again interrogate the fault memories of all control units using the "automatic test sequence".

If no fault is stored:

- Press ⇒ key.

-> Indicated on display:

```
Rapid data transfer      HELP
Select function XX
```

- Press keys 0 and 6 for the function "End output" and confirm entry with the Q key.

Note:

If the self-diagnosis has not detected a fault, use the appropriate fault table in "Fault finding engine" binder for further fault finding.

1.6 - Fault table

Notes:

- The fault tables are listed according to the 5 digit fault code on the left.
- Explanation of the fault types (e.g. "open circuit/short circuit to earth"):

=> Fault reader operating instructions

- If components are indicated as faulty:
  First check the wiring and connectors to these components as well as the system earth connections according to current flow diagram. This is particularly relevant if faults are output as "occurring sporadically" (SP).

V.A.G 1551 print-out	Possible causes of fault	Possible effects	Fault remedy
No fault recognized!	If a complaint exists: Fault not recognised during self-diagnosis	---	Continue fault finding according to fault table, in "Engine fault finding" binder.

V.A.G 1551 print-out	Possible causes of fault	Possible effects	Fault remedy
00282 Throttle valve positioner - V601)			
Short to earth	- Short to earth - V60 defective/sticking in direction closed	- Cold starting problems - Cold idling problems - Hard load changes - Idling problems	- Check V60 =>Page 43 , checking throttle valve control part
Short to positive	- Short to positive - V60 defective/sticking in direction open		
Open circuit	- Wiring open circuit		
Signal out of tolerance	- Short to earth and/or battery positive		

1) The throttle valve positioner (V60) is a component of the throttle valve control part (J338).

Protected by copyright. Copyright by Volkswagen AG. Volkswagen AG does not guarantee or accept any liability with respect to the correctness of information in this document. Copying for private or commercial purposes, in part or in whole, is not permitted unless authorised by Volkswagen AG.
satelettronica

V.A.G 1551 print-out	Possible causes of fault	Possible effects	Fault remedy
00516 Idling switch -F601) Unplausible signal	- F60 defective	- Idling problems - Driving characteristics faults when driving off	- Carry out basic setting =>Page 43 , check throttle valve control part
00518 Throttle valve potentiometer -G692) Short to earth	- G69 defective - Wiring has short to earth	- Poor throttle response - Hard load changes	- Carry out basic setting =>Page 37
Open circuit/Short to positive	- Wiring open circuit in earth cable - Wiring has short to positive - G69 defective	- Increased emission values - No full throttle recognition	- Check G69 =>Page 43 , checking throttle valve control part

1) The idling speed switch (F60) is a component of the throttle valve control part (J338).

2) The throttle valve potentiometer (G69) is a component of the throttle valve control part (J338).

V.A.G 1551 print-out	Possible causes of fault	Possible effects	Fault remedy
00519 Intake manifold pipe pressure sender -G71 Short to positive	- Wiring has short to positive	- Increased emissions values	- Check G71 =>Page 49
Open circuit/short to earth	- Wiring open circuit in earth cable - Wiring has short to earth - G71 defective	- Poor throttle response - Hard load changes	
Implausible signal	- Loose contact - G71 defective		

V.A.G 1551 print-out	Possible causes of fault	Possible effects	Fault remedy
00522 Coolant temperature sender -G62 Short to earth	- Wiring has short to earth - G62 defective	- Poor cold starting - Poor hot starting	- Check G62 =>Page 53
Open circuit/short to positive	- Wiring open circuit or short to positive - G62 defective	- No idling speed adaption - Increased emissions values	
00523 Intake air temperature sender -G42 Short to earth	- Wiring has short to earth - G42 defective	- Poor hot starting - Increased emissions values	- Check G42 =>Page 56
Open circuit/short to positive	- Wiring open circuit or short to positive - G42 defective		

V.A.G 1551 print-out	Possible causes of fault	Possible effects	Fault remedy
00524 Knock sensor 1 -G61 Signal too small	- Wiring open circuit or short to earth	- Ignition timing point has been retarded 15 < °	- Check G61 => Page 80

Copyright. Copying for private or commercial purposes, in part or in whole, is not permitted unless authorised by Volkswagen AG. Volkswagen AG does not guarantee or accept any liability with respect to the correctness of information in this document.
Protected by copyright. Copyright © Volkswagen AG.
satelettronica

V.A.G 1551 print-out	Possible causes of fault	Possible effects	Fault remedy
	- G61 defective	- Reduced output - High fuel consumption	
00525 Lambda probe -G39 Short to positive	- Wiring has short to positive - G39 defective	- No Lambda control	- Check Lambda probe and Lambda control =>Page 38
Signal too large	- G39 defective		
Signal too small	- G39 defective - Wiring has short to earth		

V.A.G 1551 print-out	Possible causes of fault	Possible effects	Fault remedy
00529 Rpm information missing No signal	- Hall sender (G40) in distributor defective - Wiring open circuit - Wiring has short to positive - Wiring has short to earth	- Engine does not start	- Check G40 => Page 76
00530 Throttle valve positioner/potentiometer -G88[1] Open circuit/short to positive	- Wiring open circuit or short to positive - G88 defective	- Cold starting problems - Idling speed not within tolerances	- Check G88 =>Page 43 , check throttle valve control part
Short to earth	- Wiring has short to earth - G88 defective	- Cold idling speed problems - Rough idling	

1) The throttle valve positioner/potentiometer (G88) is a component of the throttle valve control part (J338).

=> Current flow diagrams, Electrical fault finding and Fitting locations binder

V.A.G 1551 print-out	Possible causes of fault	Possible effects	Fault remedy
00532 Supply voltage Signal too large	- Battery voltage above 16.3 V	- No idling speed adaption	- Check alternator
00609 Ignition output 1 Short to positive	- Wiring to ignition transformer has short to positive	- Engine does not start	- Check ignition transformer final output stage =>Page 77
Open circuit/short to earth	- Wiring open circuit in earth wire - Wiring has short to earth		
01087 Basic setting not carried out	The throttle valve control part learning sequence has not been completed	---	- Carry out basic setting =>Page 37

V.A.G 1551 print-out	Possible causes of fault	Possible effects	Fault remedy
01126 Engine speed signal			

Protected by copyright. Copying for private or commercial purposes, in part or in whole, is not permitted unless authorised by Volkswagen AG. Volkswagen AG does not guarantee or accept any liability with respect to the correctness of information in this document. Copyright by Volkswagen AG.
satelettronica

V.A.G 1551 print-out	Possible causes of fault	Possible effects	Fault remedy
Short to positive	- Wiring open circuit or short to positive	- Rev. counter does not operate	- Check speed signal => Page 9 , final control diagnosis
Short to earth	- Wiring has short to earth		
01247 Activated charcoal filter solenoid valve 1 -N80 Open circuit/short to earth	- Wiring open circuit or short to earth - N80 defective	- Rough idling - Fuel odours	- Check N80 => Page 9 , final control diagnosis
Short to positive	- Wiring has short to positive - N80 defective		

V.A.G 1551 print-out	Possible causes of fault	Possible effects	Fault remedy
01249 No.1 cyl. injector -N30 Short to positive	- N30 defective - Wiring has short to positive	- Increased emissions values - Poor starting problems	- Check N30...N33 => Page 62 , checking injectors
Open circuit/short to earth	- N30 defective - Wiring open circuit in earth wire - Short to earth	- Driving characteristics faults - Poor throttle response - Rough idling	
01250 No. 2 cyl. injector -N31 Short to positive Open circuit/short to earth	See fault code 01249, Cyl. 1		
Output on V.A.G 1551 printer	**Possible causes of fault**	**Possible effects**	**Fault remedy**
01251 No. 3 cyl. injector -N32 Short to positive Open circuit/short to earth	See fault code 01249, Cyl. 1		
01252 No. 4 cyl. injector -N33 Short to positive Open circuit/short to earth	See fault code 01249, Cyl. 1		
Output on V.A.G 1551 printer	**Possible causes of fault**	**Possible effects**	**Fault remedy**
01259 Fuel pump relay -J17 Short to positive	- J17 defective - Wiring has short to positive	- Engine does not start	- Check J17 => Page 9 , final control diagnosis
Open circuit/short to earth	- J17 defective - Wiring open circuit in earth cable - Short to earth		
01265 Exhaust gas recirculation valve -N18			

Volkswagen AG does not guarantee or accept any liability with respect to the correctness of information in this document. Copyright by Volkswagen AG.
Protected by copyright. Copying for private or commercial purposes, in part or in whole, is not permitted unless authorised by Volkswagen AG.
satelettronica

V.A.G 1551 print-out	Possible causes of fault	Possible effects	Fault remedy
Short to positive see next page for further faults	- N18 (two-way valve) defective - Wiring has short to positive	- Increased emission values - Driving characteristics faults - Reduced output	- Check N18: => Repair group 26; Exhaust gas recirculation system

Output on V.A.G 1551 printer	Possible causes of fault	Possible effects	Fault remedy
01265 Continued Open circuit/short to earth	- N18 (two-way valve) defective - Wiring open circuit in earth cable - Short to earth	- Increased emission values - Driving characteristics faults - Reduced output	- Check N18: => Repair group 26; Exhaust gas recirculation system
implausible signal	- Loose contact - N18 (two-way valve) defective		
17978 Engine control unit blocked	- Attempted manipulation - Short in communication cable - Incorrect coding - Immobilizer control unit defective/missing	- Engine starts briefly and then stops again	- Adapt engine control unit to electronic immobilizer => Page 60 Check electronic immobilizer: => Repair group 96; Servicing electronic immobilizer
Output on V.A.G 1551 printer	**Possible causes of fault**	**Possible effects**	**Fault remedy**
65535 Control unit defective	- Engine control unit internally defective	- Driving characteristics faults - Engine stopped	- Renew J382 if necessary, => Page 26 , item 29

1.7 - Final control diagnosis

The final control diagnosis activates the following components in the stated sequence:

1. Throttle valve positioner (V60)
2. Activated charcoal filter solenoid valve 1 (N80)
3. Exhaust gas recirculation valve (N18),
   (two-way valve)
4. Engine speed signal
5. Fuel pump relay (J17)
6. Engine/air conditioner compressor electrical connection

Special tools, testers, measuring instruments and auxiliary items required

- Fault reader V.A.G 1551 or vehicle system tester V.A.G 1552 with cable V.A.G 1551/3
- Test box V.A.G 1598/18
- Hand multimeter V.A.G 1526 or multimeter V.A.G 1715
- Diode test lamp V.A.G 1527
- Adapter set V.A.G 1594

Protected by copyright. Copying for private or commercial purposes, in part or in whole, is not permitted unless authorised by Volkswagen AG. Volkswagen AG does not guarantee or accept any liability with respect to the correctness of information in this document. Copyright by Volkswagen AG.
satelettronica

- Current flow diagram

Check conditions

- Throttle valve potentiometer (G69) must be OK.
- Fuses 15, 18 and 21 must be OK.

Test requirements for vehicles with air conditioning system

- Vehicle at room temperature (warmer than + 15 °C).
- Air conditioning system must be switched on.
- Select lowest temperature and highest blower speed.

Notes:

If the final control diagnosis is to be repeated without the engine being started in between time, switch ignition off for approx. 20 seconds.

Work sequence

- Connect the fault reader V.A.G 1551 (V.A.G 1552) and with ignition switched on select engine electronics control unit with the "Address word" 01.
  (Connecting fault reader and selecting engine electronics control unit => Page 2 .)

-> Indicated on display:

```
Rapid data transfer     HELP
Select function XX
```

- Operate fault reader taking into account the information on the display:
- Press keys 0 and 3 for the function "Final control diagnosis".

-> Indicated on display:

```
Rapid data transfer     Q
03 Final control diagnosis
```

Activate throttle valve positioner (V60):

- Confirm entry with Q key.

-> Indicated on display:

```
Final control diagnosis
Throttle valve positioner-V60
```

The throttle valve positioner must open and close the throttle valve until switching to the next final control by pressing the ⇒key.

If the throttle valve positioner does not move:

- Check throttle valve positioner
  =>Page 43 , checking throttle valve control part

Activate solenoid valve 1 for activated charcoal filter (N80):

- Press ⇒key.

-> Indicated on display:

```
Final control diagnosis
Activ. charcoal filter solenoid valve
1     -N80
```

The solenoid valve (right-hand suspension turret) must click, until activating the next final control element by pressing ⇒key.

Protected by copyright. Copying for private or commercial purposes, in part or in whole, is not permitted unless authorised by Volkswagen AG. Volkswagen AG does not guarantee or accept any liability with respect to the correctness of information in this document. Copyright by Volkswagen AG.
satelettronica

- Pull hose off activated charcoal filter at solenoid valve.
- Connect an auxiliary hose to the vacant valve connection.
- Blow into auxiliary hose during final control diagnosis (in direction of intake manifold).
  Valve must open and close

If the solenoid valve does not click:

- Continue check => Page 12 .

Activate exhaust gas recirculation valve (N18):

- Press ⇒key.

-> Indicated on display:

```
Final control diagnosis
Exhaust gas recirculation valve -N18
```

The exhaust gas recirculation valve (N18), (two-way valve, below distributor cover) must click until after pressing ⇒key the next control element activates.

- Pull off hose from two-way valve on exhaust gas recirculation valve.
- Attach a tube to the free hose connection.
- Blow into the tube during the final control diagnosis.
  The air must escape alternately at intake pipe and at the filter on the two-way valve.

If the exhaust gas recirculation valve does not click:

- Continuing checks => Page 13 .

Display engine speed signal:

- Press ⇒key.

-> Indicated on display:

```
Final control diagnosis
Engine speed signal
```

The rev. counter must display approx. 3000 rpm, until next final control element is activated by pressing the ⇒key.

If no display appears:

- Check the rev. counter.

=> Current flow diagrams, Electrical fault finding and Fitting locations, Fuel supply system

Actuate fuel pump relay (J17):

- Press ⇒key.

-> Indicated on display:

```
Final control diagnosis
Fuel pump relay J17
```

The fuel pump relay (on the relay plate with fuse box, relay position 12) must click until switching to the next final control by pressing the ⇒key.

Note:

During the activation of the fuel pump relay the fuel pump must be heard to run at intervals.

Protected by copyright. Copying for private or commercial purposes, in part or in whole, is not permitted unless authorised by Volkswagen AG. Volkswagen AG does not guarantee or accept any liability with respect to the correctness of information in this document. Copyright by Volkswagen AG.
satelettronica

If the relay does not click:

- Check fuel pump relay:

=> Current flow diagrams, Electrical fault finding and Fitting locations, Fuel supply system

Check electrical connection to air conditioner:

Note:

The test step is only for vehicles with air conditioner. On vehicles without air conditioner end final control diagnosis by pressing ⇒key.

-> Indicated on display:

```
Final control diagnosis
Engine/air cond. compr. electr.
connection
```

The air conditioner compressor magnetic coupling must click, until ending final control diagnosis by pressing ⇒key.

If the magnetic coupling does not click:

- Check air conditioner.

=> Heater, air conditioner

- Press ⇒key.

-> Indicated on display:

```
Rapid data transfer     HELP
Select function XX
```

- Press keys 0 and 6 for the function "End output" and confirm entry with the Q key.
- Switch off ignition.

Note:

After completion of the final control diagnosis switch off ignition. If the ignition is not switched off before attempting to start, the engine will not run, as the injectors and the ignition transformer will not be activated.

Continuation of check when the activated charcoal filter solenoid 1 does not click:

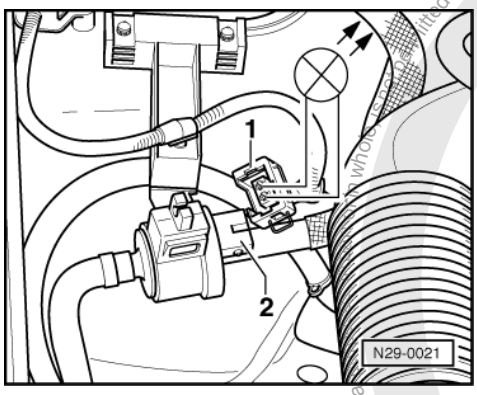

- -> Pull connector -1- off solenoid valve -2- and connect diode test lamp V.A.G 1527 with aux. cables from V.A.G 1594 to disconnected connector.
  The LED must flash (bright/darker)

LED flashes:

- Proceed with final control diagnosis until completed.
- Switch off ignition.

satelettronica

- Renew solenoid valve -2-.

=> Repair group 20; Removing and installing parts of activated charcoal filter system Removing and installing parts of activated charcoal filter system

LED does not flash:

- Proceed with final control diagnosis until completed.
- Switch off ignition.

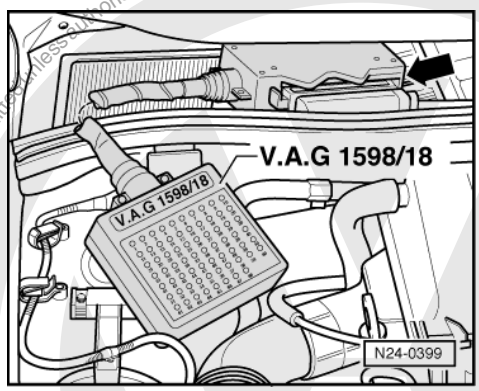

- -> Connect test box V.A.G 1598/18 to control unit wiring loom.
- Check wire for open circuit between test box sockets 3 and 2 pin connector contact 1, according to current flow diagram.
  Wire resistance: max. 1.5 ω
- Additionally check wire for short to battery positive and earth.
  Specification: ∞ω
- Check wire between 2 pin connector contact 2 and relay plate for open circuit using to current flow diagram.
  Wire resistance: max. 1.5 ω

If no wiring fault is detected:

- Renew engine control unit
  => Page 26 , item 29

Continuation of check when exhaust gas recirculation valve (two-way valve) does not click:

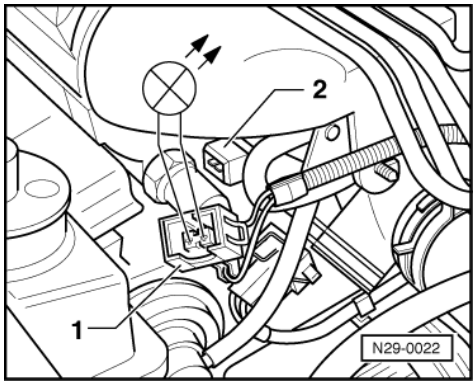

- -> Pull connector -1- off exhaust gas recirculation valve -2- and connect diode test lamp V.A.G 1527 with aux. cables from V.A.G 1594 to disconnected connector.
  The LED must flash (bright/darker)

LED flashes:

- Proceed with final control diagnosis until completed.
- Switch off ignition.
- Renew exhaust gas recirculation valve -2-.

satelettronica

=> Repair group 26; Servicing exhaust gas recirculation system Servicing exhaust gas recirculation system

LED does not flash:

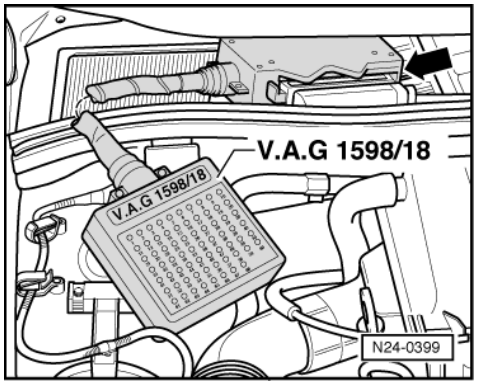

- Proceed with final control diagnosis until completed.
- Switch off ignition.
- -> Connect test box V.A.G 1598/18 to control unit wiring loom.
- Check wire for open circuit between test box sockets 5 and 2 pin connector contact 2, according to current flow diagram.
  Wire resistance: max. 1.5 ω
- Additionally check wire for short to battery positive and earth.
  Specification: ∞ω
- Check wire between 2 pin connector contact 1 and relay plate for open circuit according to current flow diagram.
  Wire resistance: max. 1.5 ω

If no wiring fault is detected:

- Renew engine control unit
  => Page 26 , item 29

1.8 - Read measured value block and basic settings

The measured values in the functions read measured value block and basic setting are described during the individual component test. This table serves only as an overview.

Note:

To change to another display group proceed as follows:

Display group	V.A.G 1551	V.A.G 1552
Higher	Press key 3	Press ↑key
Lower	Press key 1	Press ↓key
Skip	Press key C	Press key C

1.9 - Display group overview

Display group 0 (decimal displayed value)												
Test conditions ▪ Engine runs at idling speed ▪ The coolant temperature is at least 80 °C ▪ The electrical consumers are switched off												
Display zones											Specification	Corresponds to
1	2	3	4	5	6	7	8	9	10	Engine speed	71...63	820...920/min1)

Protected by copyright. Copyright by Volkswagen AG.
Copyright by Volkswagen AG. Volkswagen AG does not guarantee or accept any liability with respect to the correctness of information in this document. Copying for private or commercial purposes, in part or in whole, is not permitted unless authorised by Volkswagen AG.
satelettronica

Display group 0 (decimal displayed value)		
Injection period	4...10	2.05...5.12 ms
Throttle valve potentiometer voltage	28...42	4.37...4.06 V
Not relevant	---	---
Not relevant	---	---
Lambda probe signal	0...195	0...0.95 V
Intake manifold pressure	49...88	320...500 mbar
Coolant temperature	37...19	80...105 °C
Battery voltage	187...226	12.0...14.5 V
Intake air temperature	156...44	15...70 °C

1) Up-to-date specifications:

=> Exhaust emissions test binder

	Display zones			
	1	2	3	4
Display group 1				
Display	xxxxrpm	xx.x °C	x.x V	xxxxxxxx
Indicated	Engine speed	Coolant temperature	Lambda probe voltage	Adjustment conditions4)
Specification1)	820...9202)3)	80...105	0...0.95 fluctuating	00000000
Display group 2				
Display	xxxx rpm	xx.xx ms	xx.x V	xx.x °C
Indicated	Engine speed	Injection period	Battery voltage	Intake air temperature
Specification1)	820...9202)3)	2.05...5.12	12.0...14.5 V	15...70

1) The specifications must be attained when:

- engine runs at idling speed,

- the coolant temperature is at least 80 °C and

- electrical consumers are switched off

2) The control unit increases idling speed under following conditions:

- When the battery voltage is too low

- After a long full throttle drive and at higher temperatures

- When air conditioner is switched on

3) Up-to-date specifications:

=> Exhaust emissions test binder

4) Significance of numbers in 8 digit number block => Page 16

	Display zones			
	1	2	3	4
Display group 3				
Display	xxxx rpm	xxx %	xx <°	xx.x %
Indicated	Engine speed	Engine load	Throttle valve angle	Position of throttle valve by throttle valve positioner
Specification1)	820...9202)3)	18...28	1...10	5...30
Display group 4				

Protected by copyright. Copyright by Volkswagen AG. Volkswagen AG does not guarantee or accept any liability with respect to the correctness of information in this document. Copying for private or commercial purposes, in part or in whole, is not permitted unless authorised by Volkswagen AG.
satelettronica

	Display zones			
Display	xxxx rpm	xxx %	xxx	xxxxxxxx
Indicated	Engine speed	Engine load	Speed signal	Operating condition4)
Specification1)	820...9202)3)	18...28	255	01000000
Display group 5				
Display	xxxx rpm	xxx %		
Indicated	Engine speed	Duty cycle solenoid valve 1 for activated charcoal filter	---	---
Specification1)	820...9202)3)	6...19	---	---

	Display zones			
	1	2	3	4
Display group 6				
Display	xxx	xxx	xxx	xxx
Indicated	Mixture correction value	Learning value for mixture correction	Learning value for idling stabilization by throttle valve positioner	The stored value of "Basic setting" for throttle valve potentiometer position: Throttle valve closed
Specification	Fluctuating around 128 Tolerance range 85...160	Not for service	Not for service	20...30

1) The specifications must be attained when:

- engine runs at idling speed,

- the coolant temperature is at least 80 °C and

- electrical consumers are switched off

2) The control unit increases idling speed under following conditions:

- When the battery voltage is too low

- After a long full throttle drive and at higher temperatures

- When air conditioner is switched on

3) Up-to-date specifications:

=> Exhaust emissions test binder

4) Significance of numbers in 8 digit number block => Page 16 .

Significance of figures in 8 digit number block

Significance when displayed digit = 1									
x	x	x	x	x	x	x	x	Adjustment conditions (display group 1)	Operating condition (display group 4)
1								Not relevant	Overrun
	1							Not relevant	Idling speed
		1						Air conditioner compressor switched on	Part load
			1					Idling switch open1)	Full load
				1				Fault in the Lambda control2)	Not relevant
					1			Throttle valve opened	Not relevant
						1		Speed above 1800 rpm	Not relevant

Copyright by Volkswagen AG. Volkswagen AG does not guarantee or accept any liability with respect to the correctness of information in this document. Copying for private or commercial purposes, in part or in whole, is not permitted unless authorised by Volkswagen AG.
satelettronica

Significance when displayed digit = 1									
								1	Coolant temperature below 80 °C	Not relevant

1) The problem may be: e.g. the accelerator cable is set too tight.

2) Self-diagnosis will not register all faults. If a 1 is displayed even when no faults are stored, check Lambda probe and Lambda control =>Page 38 .

Protected by copyright. Copying for private or commercial purposes, in part or in whole, is not permitted unless authorised by Volkswagen AG. Volkswagen AG does not guarantee or accept any liability with respect to the correctness of information in this document. Copyright by Volkswagen AG.

satelettronica

24 - Mixture preparation, Injection

1 - Servicing injection system

1.1 - Servicing injection system

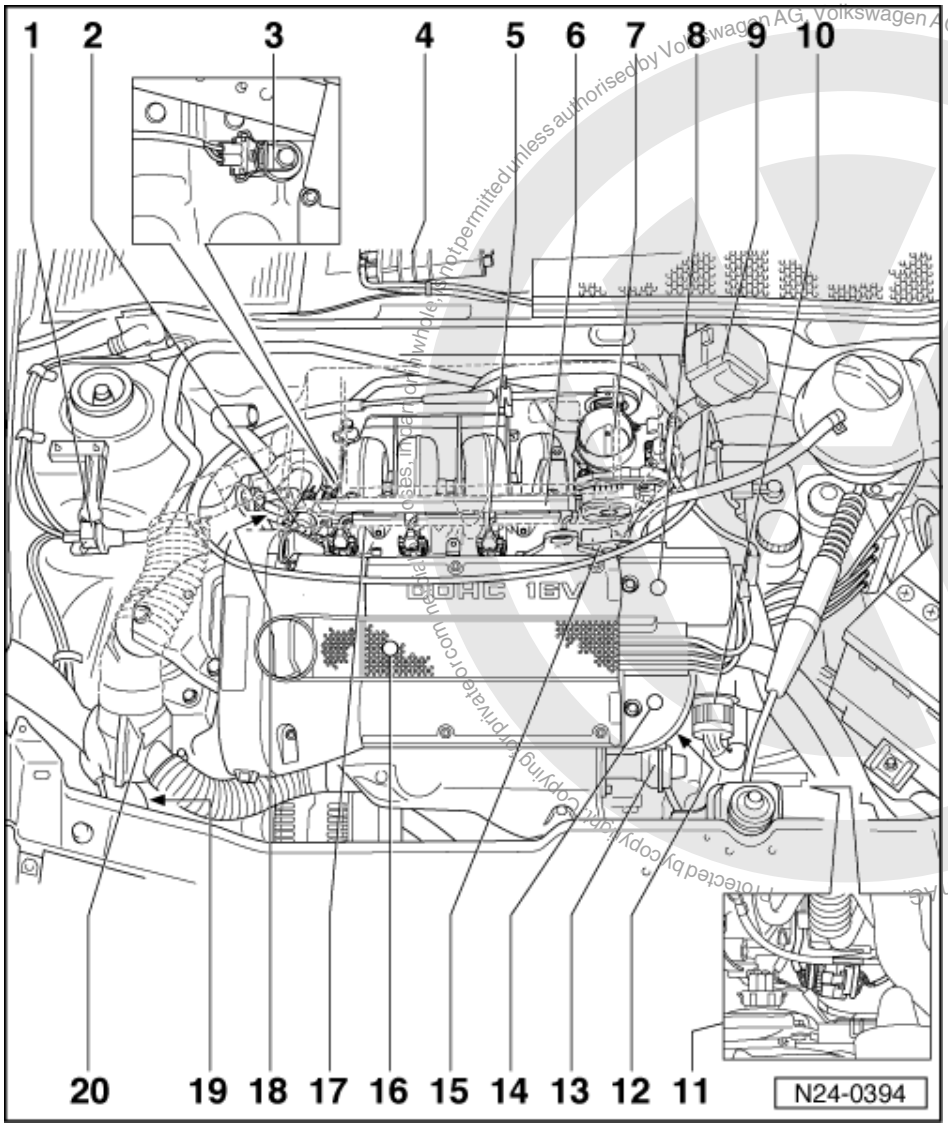

1.2 - Fitting locations overview

1 Activated charcoal filter solenoid valve 1 (N80)
- Activated charcoal filter system

=> Repair group 20, removing and installing parts of the fuel supply system, removing and installing parts of the activated charcoal filter system

2 Fuel pressure regulator

3 Knock sensor 1 (G61)
- =>Page 73

Volkswagen AG does not guarantee or accept any liability with respect to the correctness of information in this document. Copyright by Volkswagen AG. Protected by copyright. Copying for private or commercial purposes, in part or in whole, is not permitted unless authorised by Volkswagen AG.
satelettronica

4 Engine control unit
(control unit for 1AV fuel injection and ignition system -J382)
5 Injector (N30...N33)
6 Fuel rail

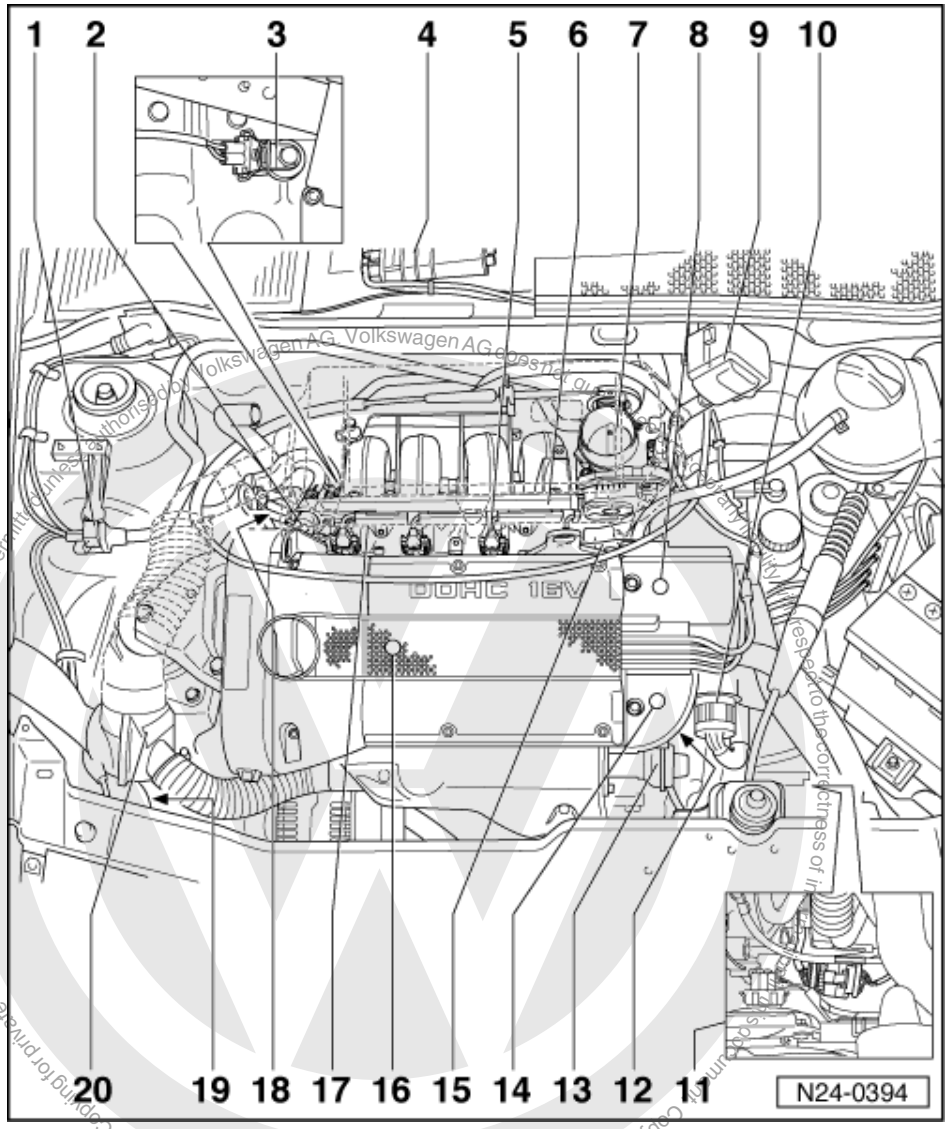

7 Throttle valve control part (J338)
8 Distributor
- =>Page 73
9 Ignition transformer (N152)
- =>Page 71
10 Central connector
11 4 pin connector
- For Lambda probe (G39)
12 Coolant temperature sender (G62)
- Identification: yellow ring
13 Exhaust gas recirculation valve
- Exhaust gas recirculation system

=> Repair group 26; Servicing exhaust gas recirculation system Servicing exhaust gas recirculation system

satelettronica

14 Exhaust gas recirculation valve (N18)
- Two-way valve

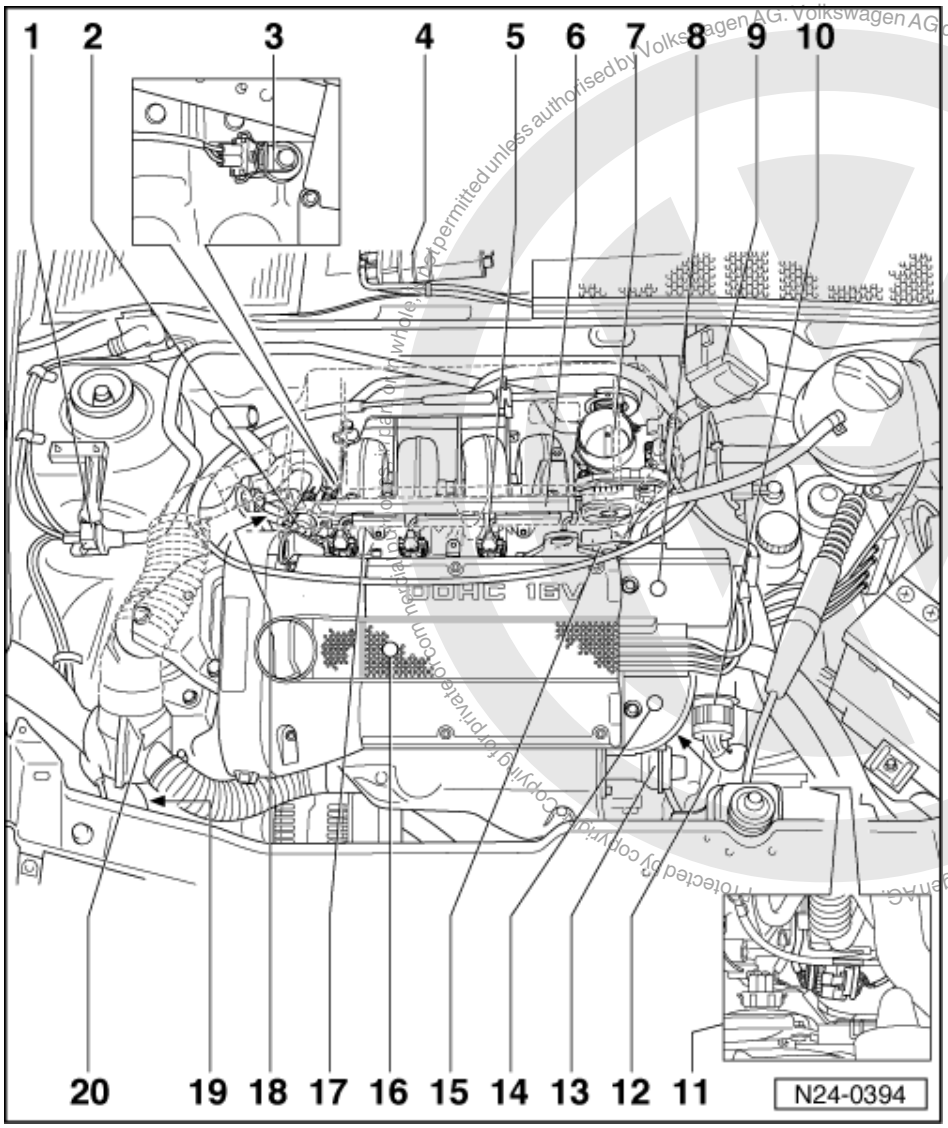

15 Earth connection
16 Spark plug, 30 Nm
- =>Page 75

17 Air cleaner
- Removing => Page 36 ,
  Fig. 3

18 Intake manifold pressure sender (G71) with intake air temperature sender (G42)
19 Activated charcoal filter
- Activated charcoal filter system

=> Repair group 20, removing and installing parts of the fuel supply system, removing and installing parts of the activated charcoal filter system

20 Control flap
- For intake air preheating

Volkswagen AG. Volkswagen AG does not guarantee or accept any liability with respect to the correctness of information in this document. Copyright by Volkswagen AG. Protected by copyright. Copying for private or commercial purposes, in part or in whole, is not permitted unless authorised by Volkswagen AG.
satelettronica

1.3 - General notes on injection

Servicing ignition part:

=> Repair group 28

Notes:

- The engine control unit is equipped with self-diagnosis. Before carrying out repairs and fault finding the fault memory must be interrogated. Also the vacuum hoses and connections must be checked (unmetered air).
- Components marked with * are checked via the self diagnosis
  => Page 3 , interrogating and erasing fault memory.
- Components marked with **can be checked with the final control diagnosis => Page 9 .
- Disconnecting and connecting the battery must only be done with the ignition switched off, otherwise the engine control unit could be damaged.
- For trouble-free operation of the electrical components a voltage of at least 11.5 V is necessary.
- If the engine starts, runs for a short period and then stops, after fault finding, repairs or component tests, then the fault may lie with the immobilizer which is blocking the engine control unit. The fault memory must be interrogated and if necessary the control unit matched => Page 60 .
- Do not use sealants containing silicone. Particles of silicone drawn into the engine, will not be burnt in the engine and damage the Lambda probe.
- During some checks it is possible that the control unit will recognise and store a fault. Therefore after completing all checks and repairs the fault memory must be interrogated and if necessary erased.
  => Page 3 , interrogating and erasing fault memory
- The "learnt" values will be erased if the control unit is disconnected from the current supply. Engine running problems may occur until the control unit has "relearnt" all values.
- Always renew spring-type hose clips with screw-type hose clips.

Safety precautions =>Page 36

Rules for cleanliness => Page 36

Technical data => Page 36

Checking intake system for leaks (unmetered air) => Page 66

Protected by copyright. Copying for private or commercial purposes, in part or in whole, is not permitted unless authorised by Volkswagen AG. Volkswagen AG does not guarantee or accept any liability with respect to the correctness of information in this document. Copyright by Volkswagen AG.
satelettronica

1.4 - Removing and installing parts of the injection system

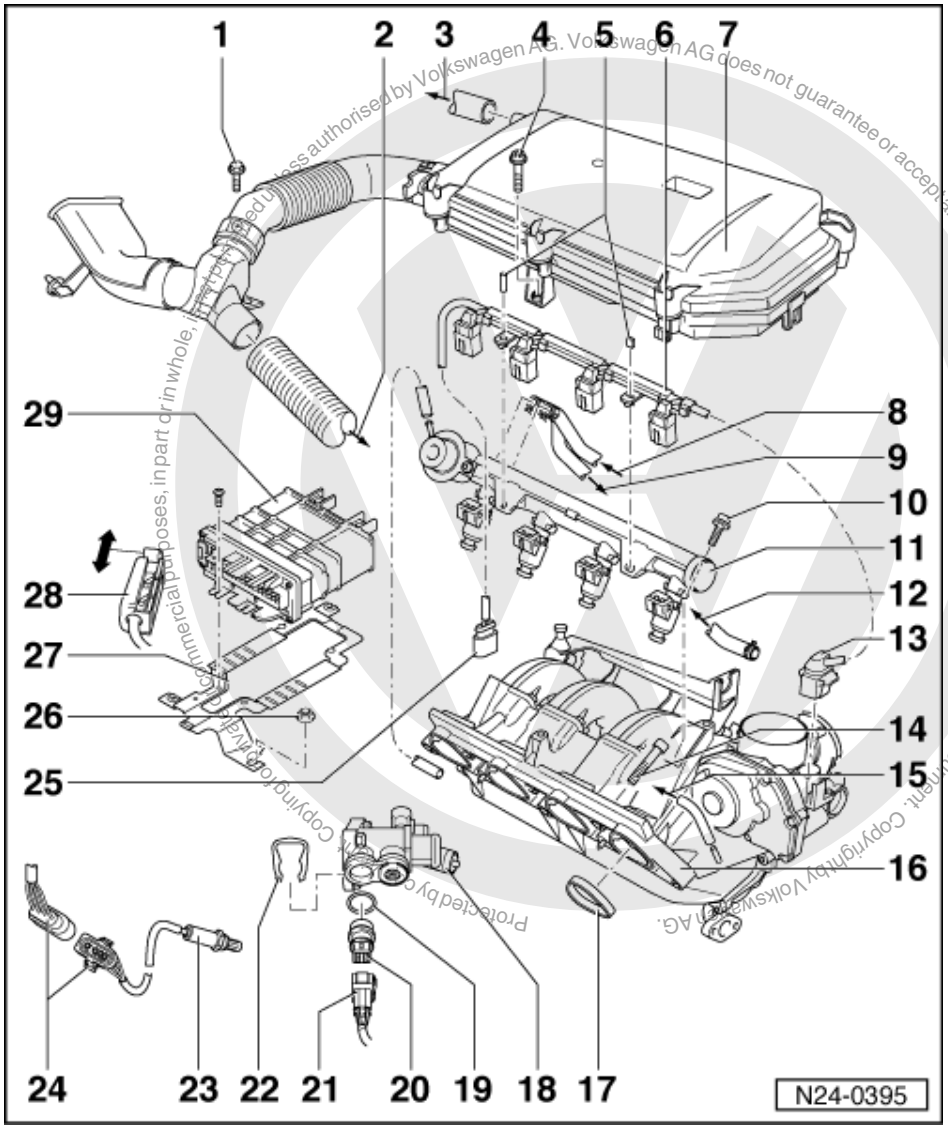

1 10 Nm
2 Warm air intake
- To warm air collecting plate on exhaust manifold

3 To oil separator
4 10 Nm
5 Spreader pin
6 Cable guide
7 Air cleaner
- Removing => Page 36 , Fig. 3
- Dismantling and assembling => Page 33

8 Supply hose
- Secure with spring-type clips on fuel manifold
- Black or white markings

satelettronica

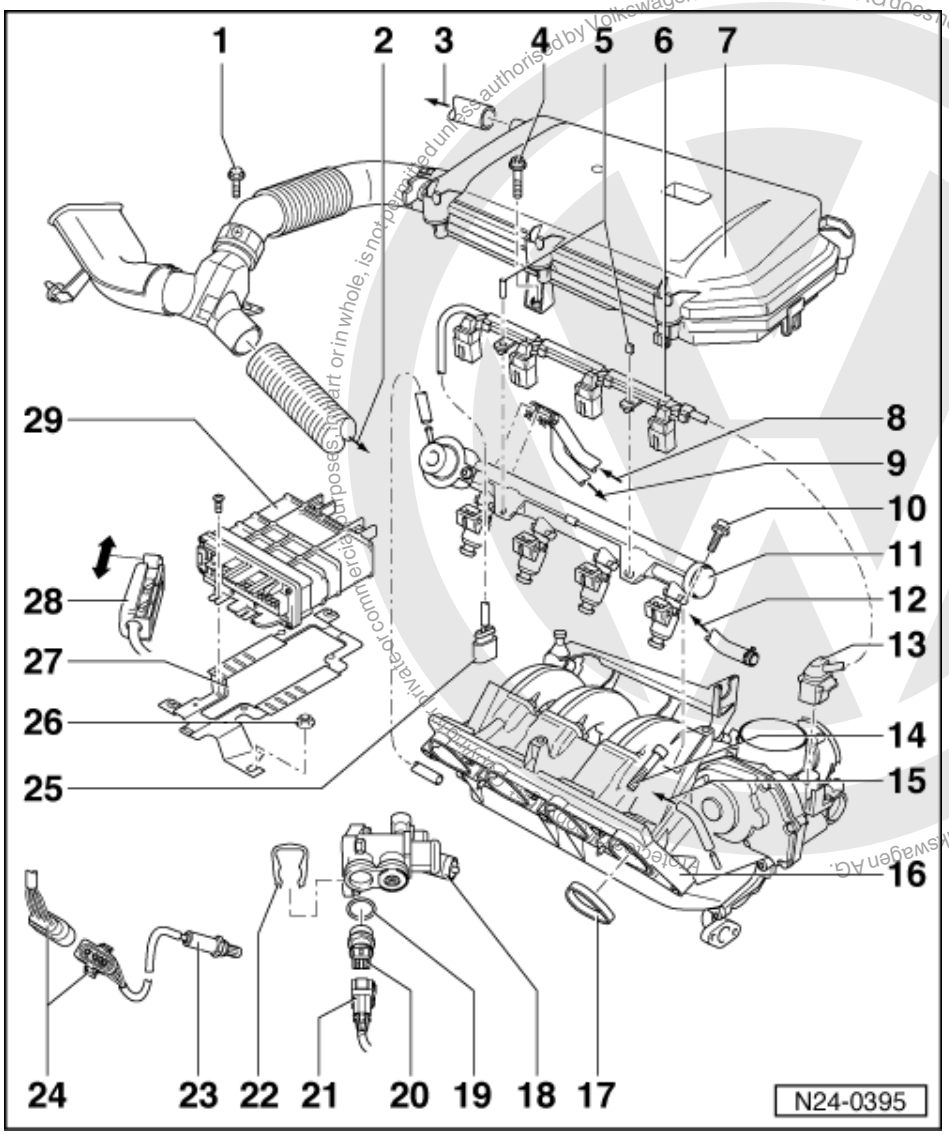

9 Return hose
- Secure with spring-type clips on fuel manifold
- Blue or blue markings

10 10 Nm

11 Fuel manifold with injectors
- Dismantling and assembling => Page 28

12 To activated charcoal filter solenoid valve 1 (N80)*/**
- Activated charcoal filter system

=> Repair group 20, removing and installing parts of the fuel supply system, removing and installing parts of the activated charcoal filter system

13 Connector
- 8 pin
- For throttle valve control part (J338)

14 20 Nm

satelettronica

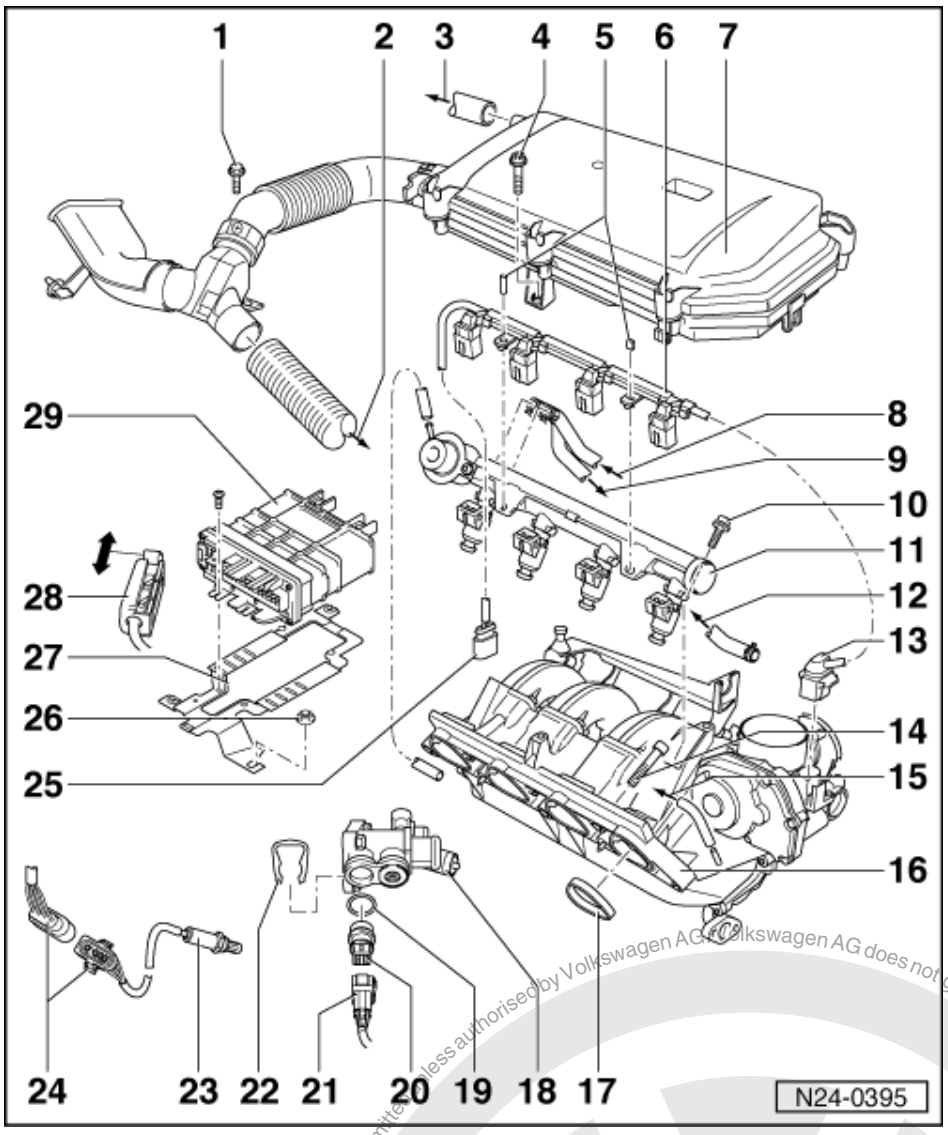

15 To exhaust gas recirculation valve (N18)*/**

=> Repair group 26; Servicing exhaust gas recirculation system Servicing exhaust gas recirculation system

16 Intake manifold
- Dismantling and assembling => Page 30

17 O ring
- Renew

18 Thermostat housing

19 O ring
- Renew if damaged

20 Coolant temperature sender (G62)*
- With coolant temperature gauge sender (G2)
- Identification: yellow ring
- If necessary before removing, release pressure from cooling system
- Checking =>Page 53
- Resistance graph
  =>Page 35 , Fig. 1

Protected by copyright. Copying for private or commercial purposes, in part or in whole, is not permitted unless authorised by Volkswagen AG. Volkswagen AG does not guarantee or accept any liability with respect to the correctness of information in this document. Copyright by Volkswagen AG.
satelettronica

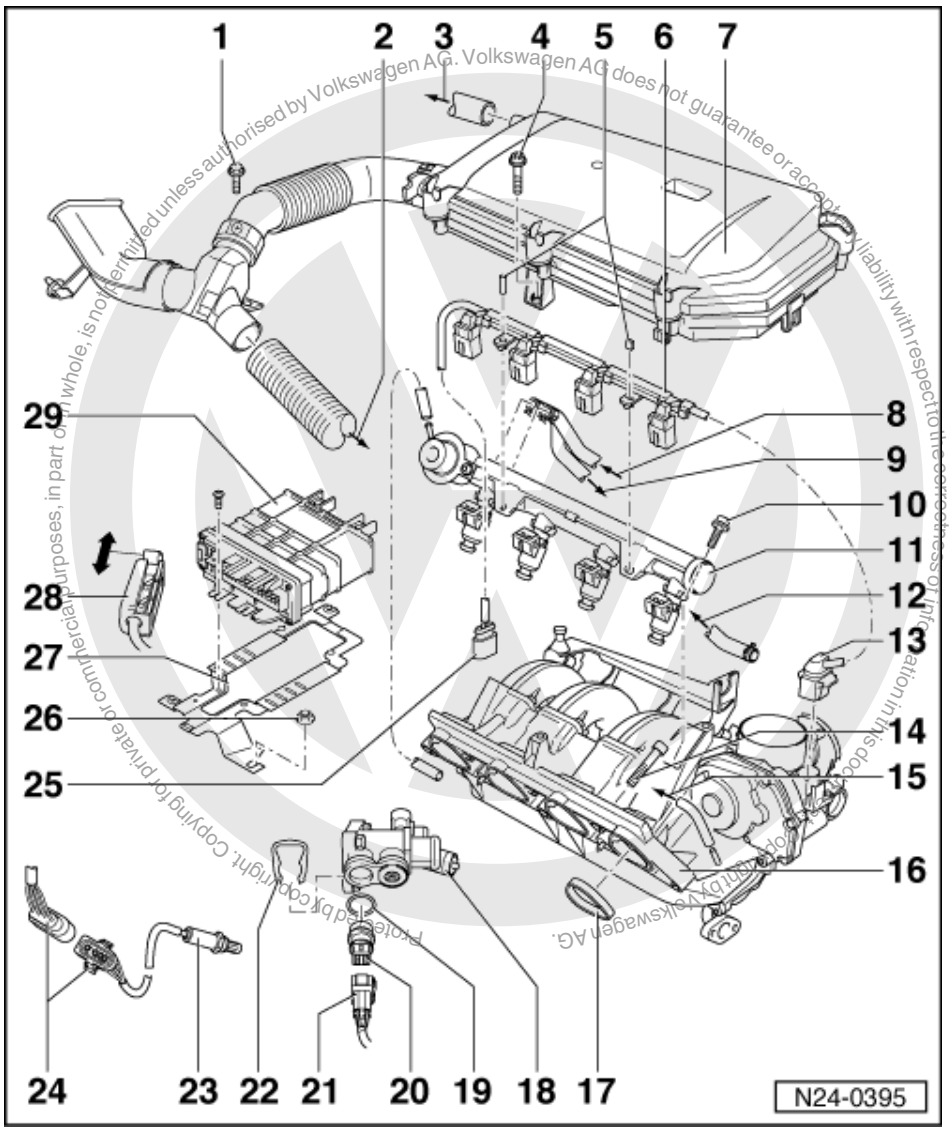

21 Connector
- 4-pin

22 Retaining clip

23 Lambda probe (G39)*, 55 Nm
- Location: In front exhaust pipe
- Only grease threads with "G5"; "G5" must not get into the slots on the probe body
- Checking Lambda probe and Lambda control
  => Page 38
- Checking probe heating voltage supply => Page 40
- Check probe heating for continuity

24 4 pin connector
- For Lambda probe and Lambda probe heating

satelettronica

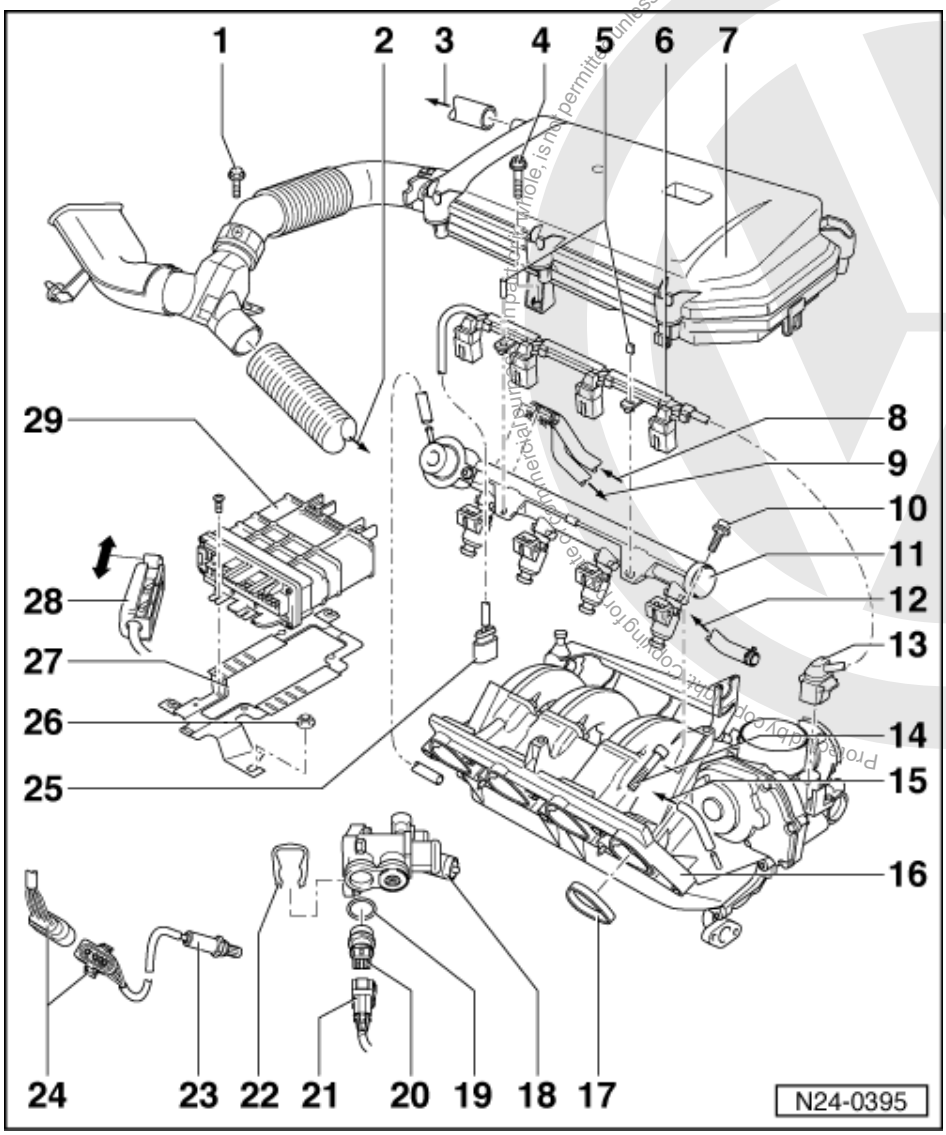

25 Connector
- 4-pin
- For intake manifold pressure sender (G71) with intake air temperature sender (G42)

26 10 Nm

27 Securing plate

28 Connector
- Only disconnect or connect with ignition switched off

29 Engine control unit*

(control unit for 1AV fuel injection and ignition system -J382)
- For injection system, Lambda control, activated charcoal filter solenoid valve, knock control, governed speed, exhaust gas recirculation, ignition and self-diagnosis
- Location: in plenum chamber, right
- Checking voltage supply => Page 58

Protected by copyright. Copying for private or commercial purposes, in part or in whole, is not permitted unless authorised by Volkswagen AG. Volkswagen AG does not guarantee or accept any liability with respect to the correctness of information in this document. Copyright by Volkswagen AG.
satelettronica

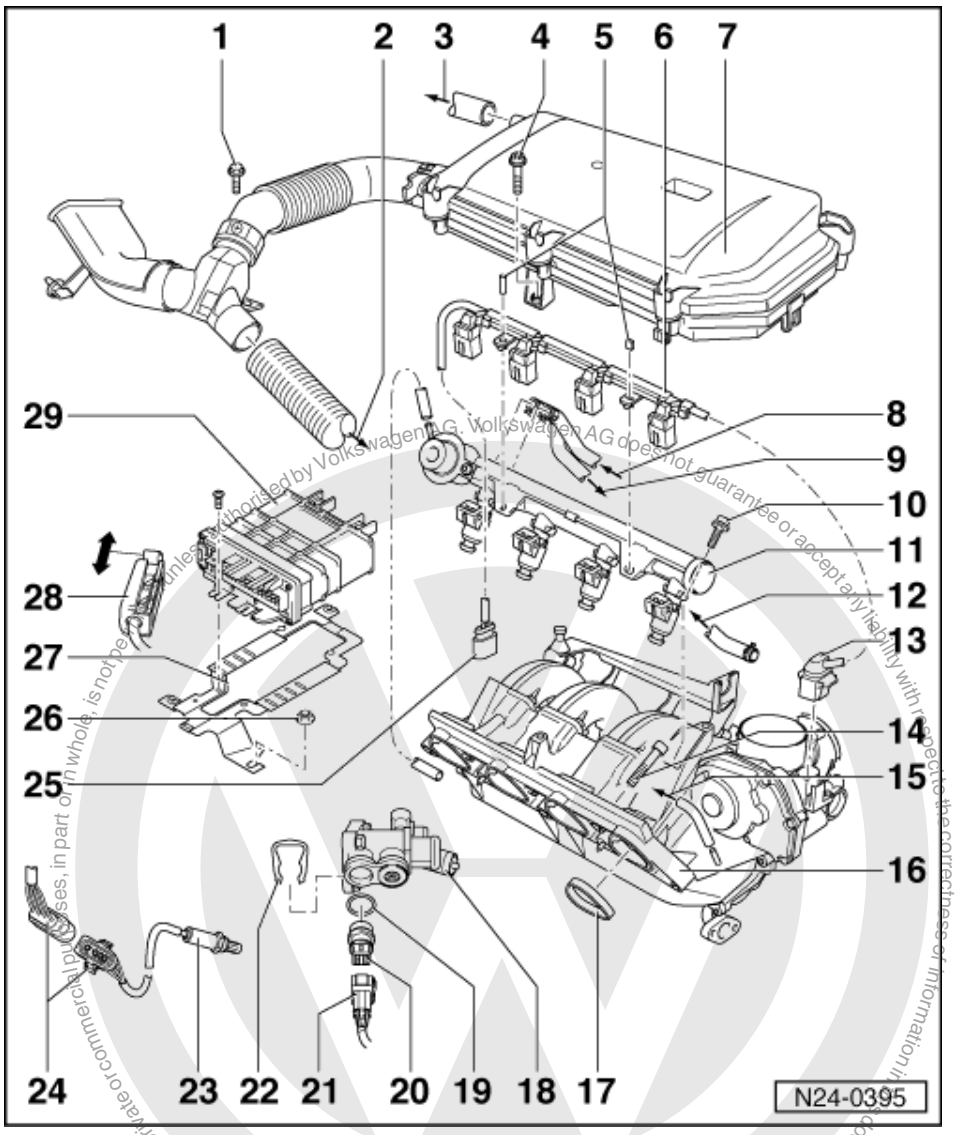

If the control unit is replaced:

- Perform basic settings => Page 37
- Match control unit to electronic immobilizer => Page 60

Protected by copyright. Copyright by Volkswagen AG.
Copyright by Volkswagen AG. Volkswagen AG does not guarantee or accept any liability with respect to the correctness of information in this document.
Copyright by Volkswagen AG. Unauthorized by Volkswagen AG, unless authorized by Volkswagen AG, is not permitted, in part or in whole, is not permitted for commercial purposes.
satelettronica

1.5 - Dismantling and assembling fuel manifold with injectors

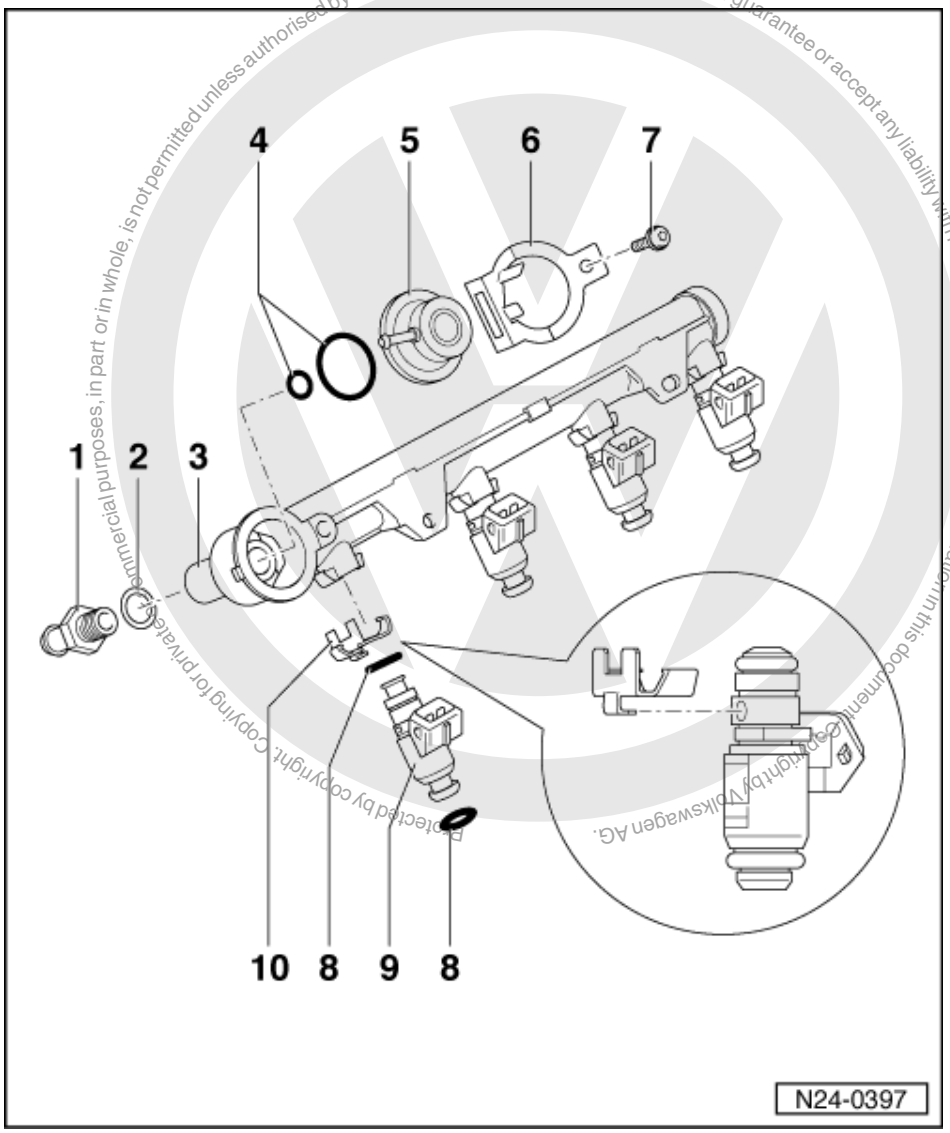

Protected by copyright. Copying for private or commercial purposes, in part or in whole, is not permitted unless authorised by Volkswagen AG. Volkswagen AG does not guarantee or accept any liability with respect to the correctness of information in this document. Copyright by Volkswagen AG.

1 Connection
- Install with D6

2 Seal
- Renew

3 Fuel rail

4 O ring
- Renew

5 Fuel pressure regulator
- Checking fuel pressure regulator and holding pressure => Page 64

6 Retainer

7 2.4 Nm

8 O ring
- Renew

satelettronica

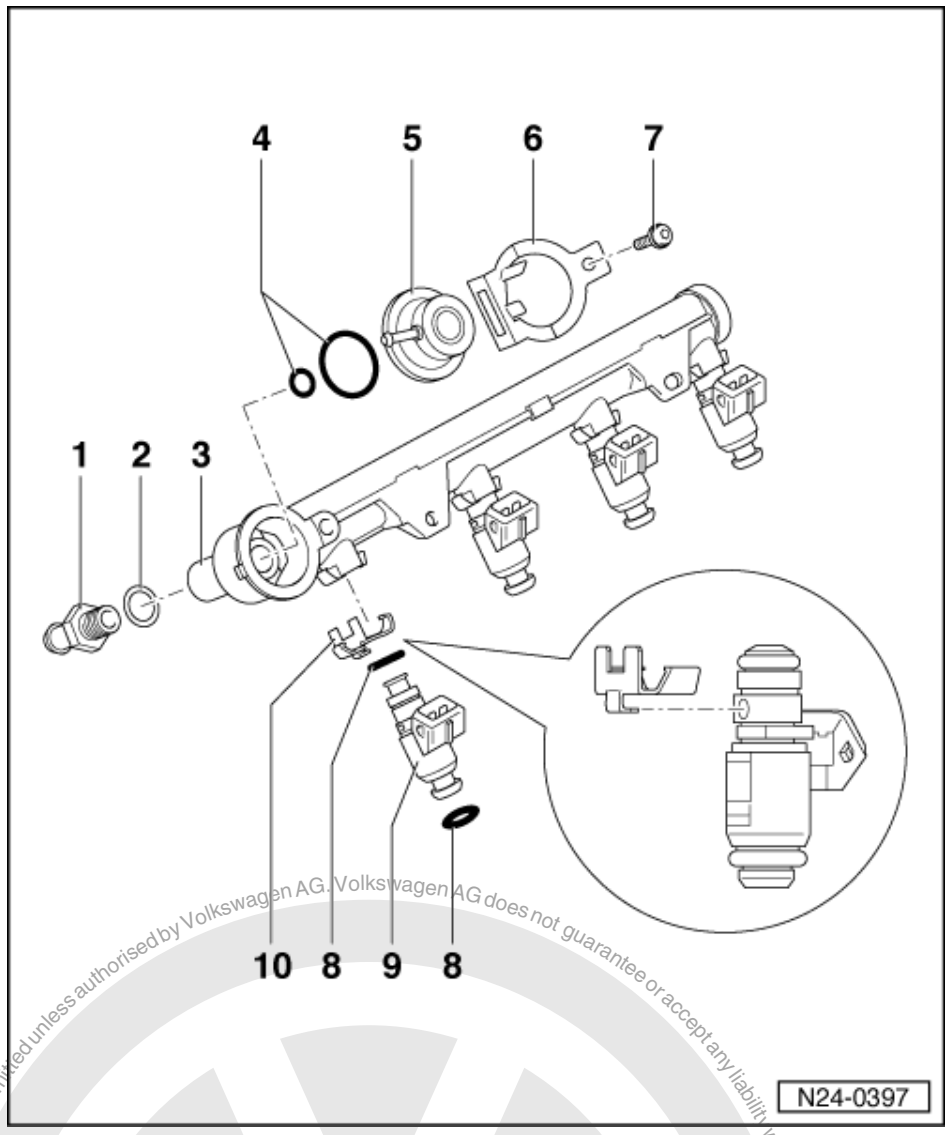

9 Injectors (N30...N33)*
- Checking => Page 62
- Resistance 14...17 ω

10 Retaining clip
- Ensure seated correctly at injector and fuel rail

Protected by copyright. Copying for private or commercial purposes, in part or in whole, is not permitted unless authorised by Volkswagen AG. Volkswagen AG does not guarantee or accept any liability with respect to the correctness of information in this document. Copyright by Volkswagen AG.
satelettronica

1.6 - Dismantling and assembling intake manifold

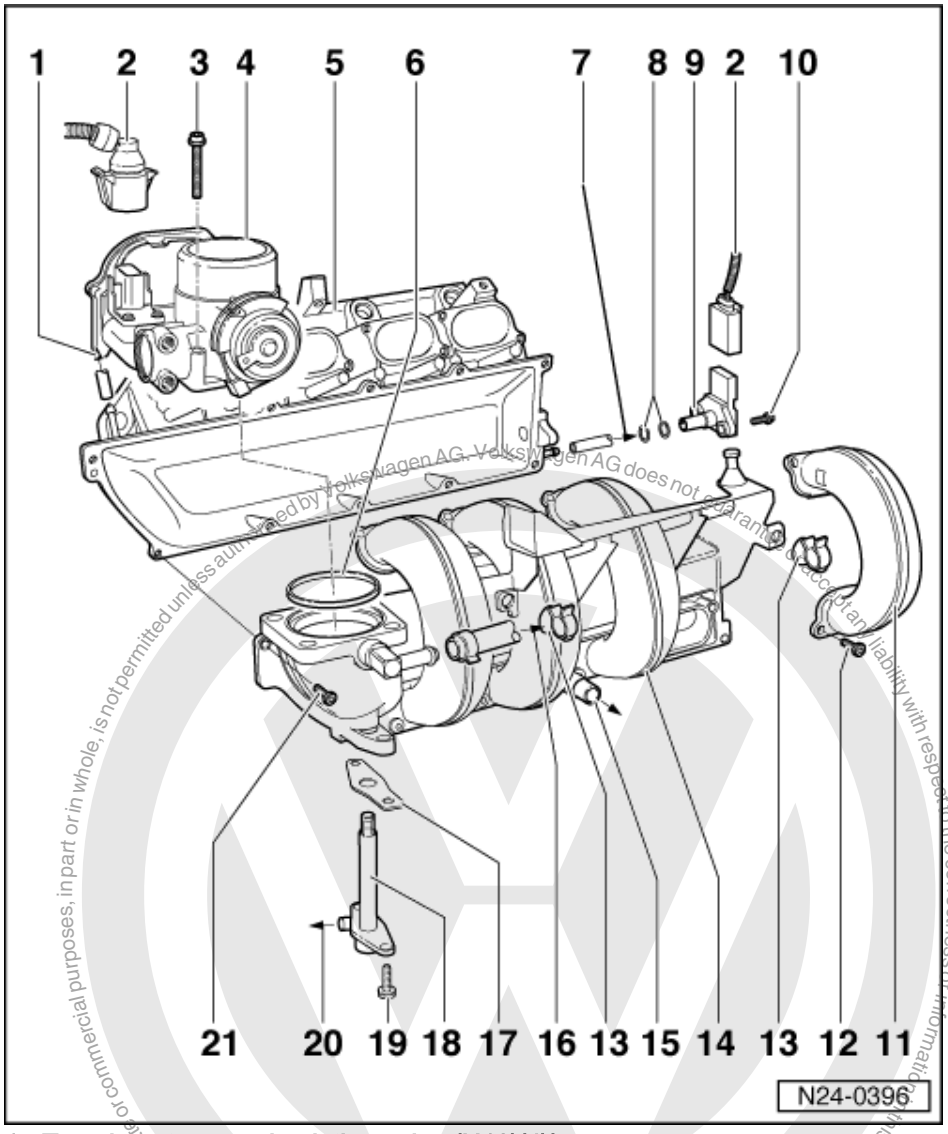

1 To exhaust gas recirculation valve (N18)*/**

=> Repair group 26; Servicing exhaust gas recirculation system Servicing exhaust gas recirculation system

2 Connector
3 10 Nm
4 Throttle valve control part (J338)*
- Checking => Page 43
- Components of the throttle valve control part (J338):
  Throttle valve positioner (V60), throttle valve potentiometer (G88), throttle valve potentiometer (G69) and idling switch (F60)
  If the control unit is replaced:
- Perform basic settings => Page 37

satelettronica

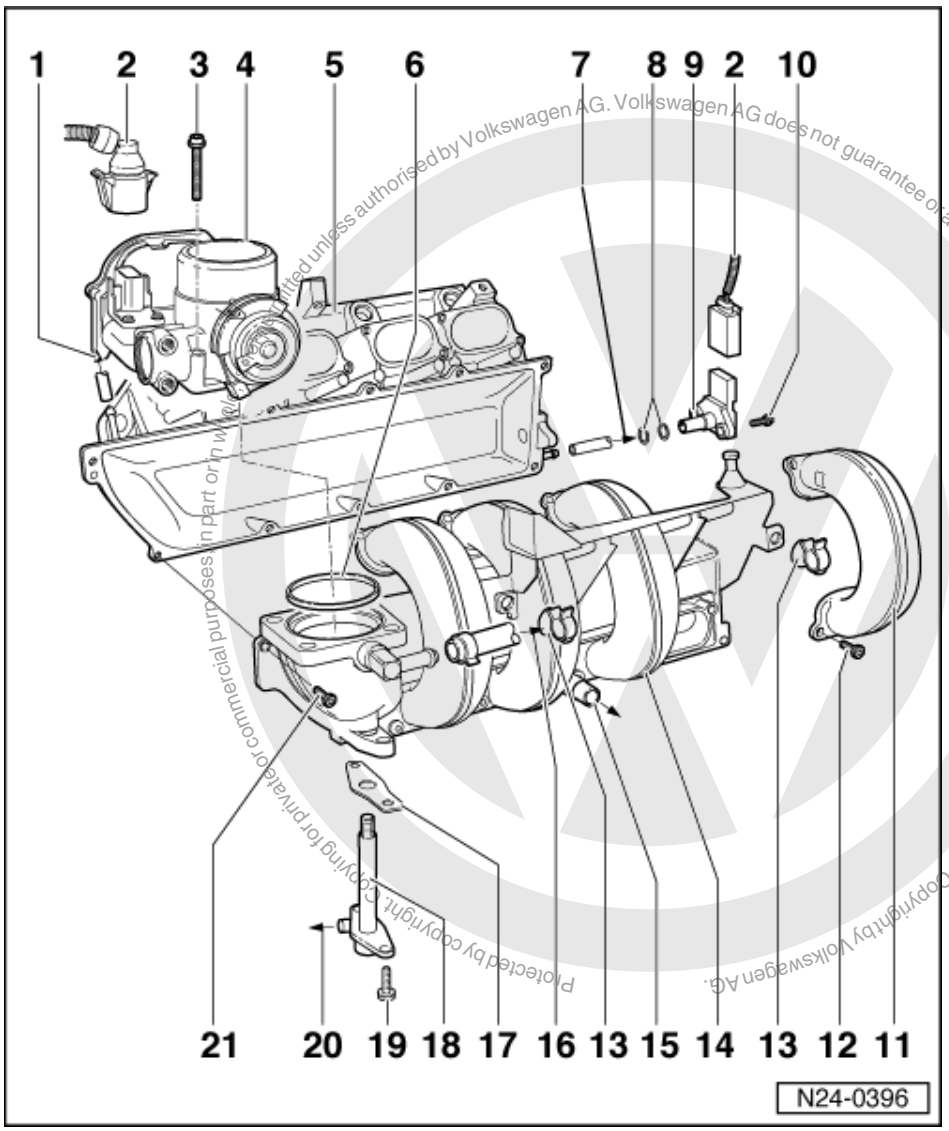

5 Intake manifold - front part
6 Seal
- Renew if damaged

7 To fuel pressure regulator
- =>Page 28 , item 5

8 O ring
- Renew if damaged

9 Intake manifold pressure sender (G71)* with intake air temperature sender (G42)*
- Resistance values for intake air temperature sender =>Page 35 , Fig. 2

10 2.4 Nm
11 Elbow
12 5 Nm
13 Retaining clip
14 Intake manifold - rear part

satelettronica

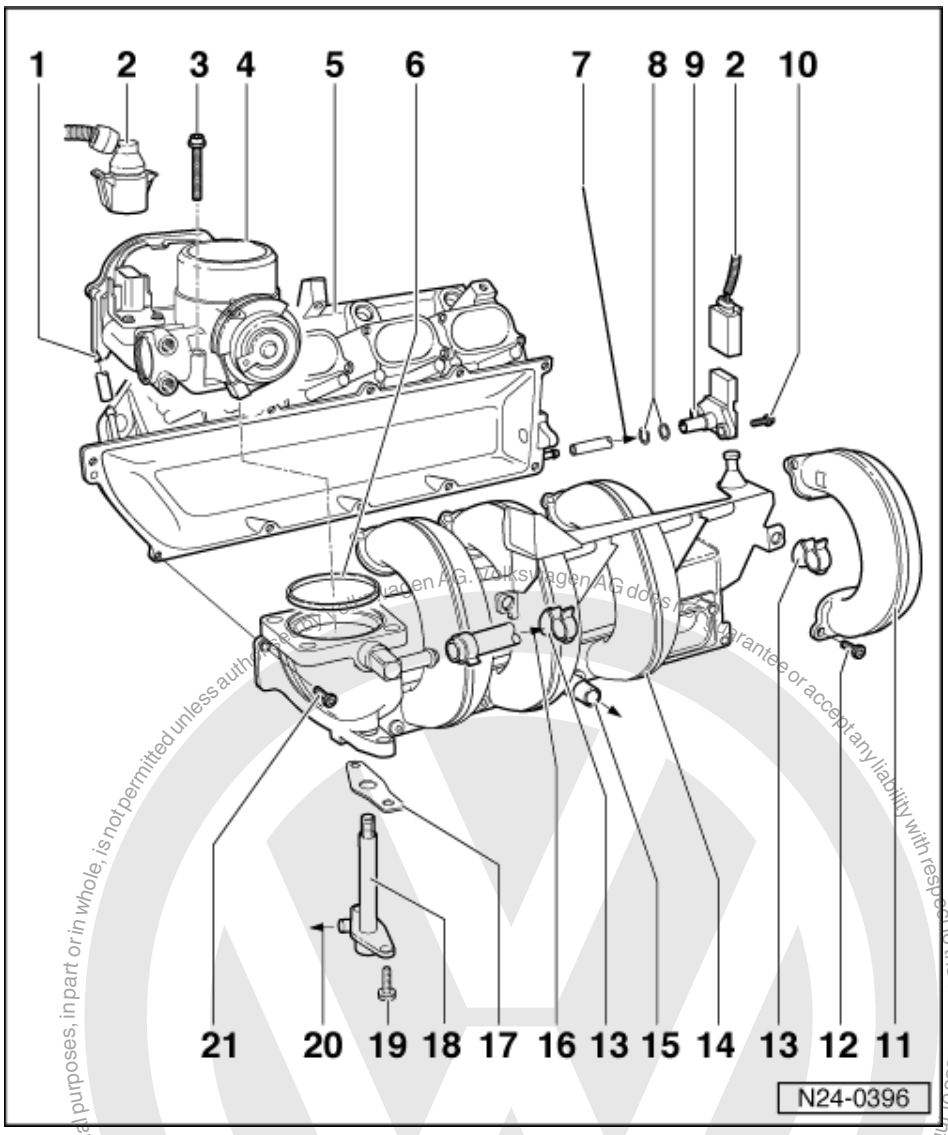

15 To brake servo

16 To activated charcoal filter solenoid valve 1 (N80)*/**

- Activated charcoal filter system

=> Repair group 20, removing and installing parts of the fuel supply system, removing and installing parts of the activated charcoal filter system

17 Seal

- Renew

18 Outlet pipe

- For exhaust gas recirculation

19 10 Nm

20 To exhaust gas recirculation system

=> Repair group 26; Servicing exhaust gas recirculation system Servicing exhaust gas recirculation system

21 5 Nm

satelettronica

1.7 - Dismantling and assembling air cleaner

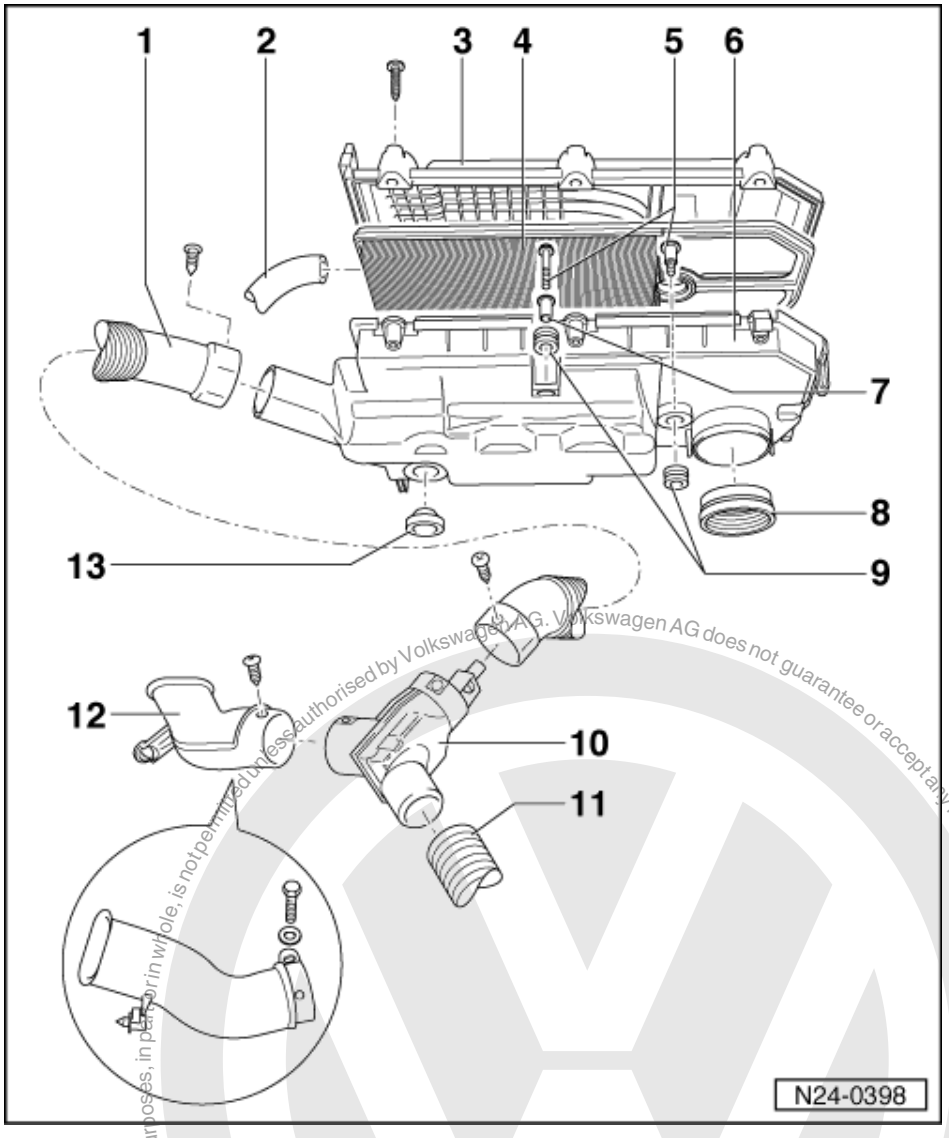

Removing air cleaner => Page 36 , Fig. 3

1 Connecting hose
2 Crankcase breather hose
3 Air cleaner cover

Note:

If the cover screws are loosened or tightened with a power tool the lower part of the thread can be damaged. Therefore the use of a power tool is only permissible when:

- The power tool speed is max. 200 rpm
- The tightening torque is set to max. 3 Nm

satelettronica
Protected by copyright. Copying for private or commercial purposes, in part or in whole, is not permitted unless authorised by Volkswagen AG. Volkswagen AG does not guarantee or accept any liability with respect to the correctness of information in this document. Copyright by Volkswagen AG.

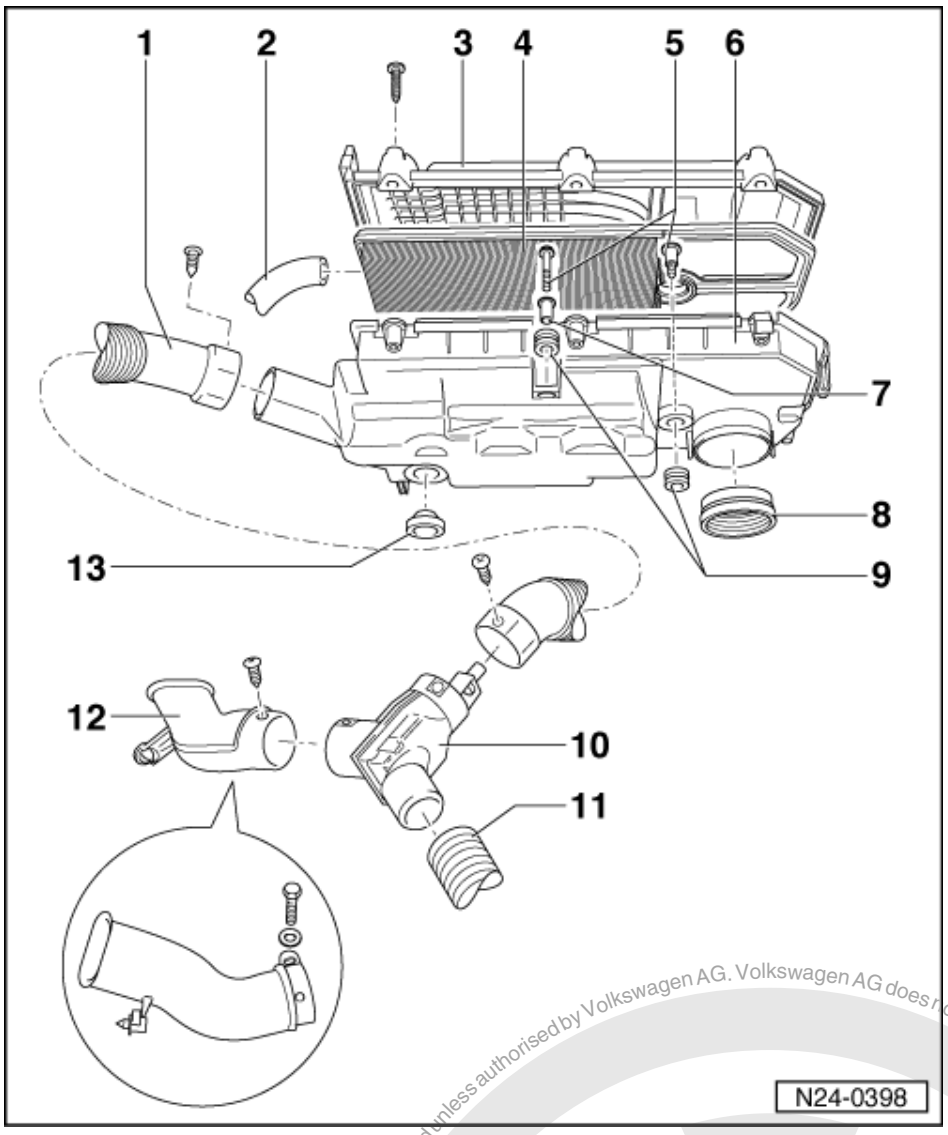

4 Filter element
5 10 Nm
6 Air cleaner lower part
7 Spacer sleeve
8 Seal
- Renew if damaged

9 Rubber grommet
10 Regulating flap
- Check intake air preheating => Page 67

11 Warm air intake
12 Air intake connecting piece
13 Rubber bush

Protected by copyright. Copying for private or commercial purposes, in part or in whole, is not permitted unless authorised by Volkswagen AG. Volkswagen AG does not guarantee or accept any liability with respect to the correctness of information in this document. Copyright by Volkswagen AG.
satelettronica

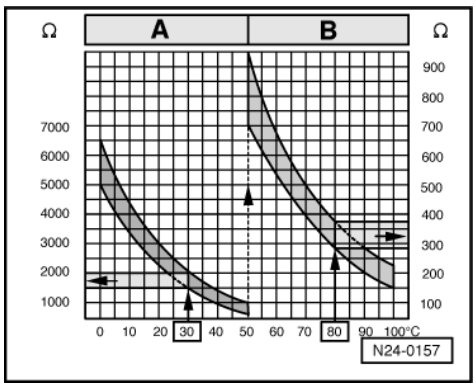

-> Fig. 1 Resistance values for coolant temperature sender (G62)

Scale A shows resistance values for temperature range 0...50 °C and scale B the values for temperature range 50...100 °C.

Examples:

- 30 °C corresponds to a resistance from 1500...2000 ω
- 80 °C corresponds to a resistance from 275...375 ω

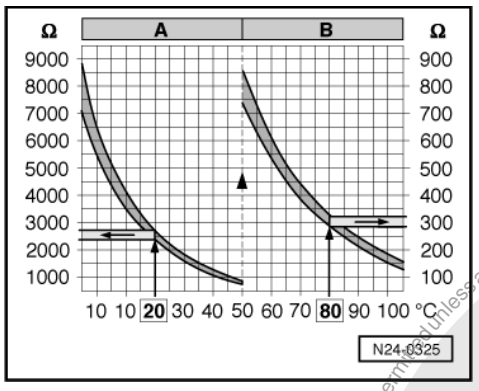

-> Fig.2 Resistance values for intake air temperature sender (G42)

Scale A shows resistance values for temperature range 0...50 °C and scale B the values for temperature range 50...100 °C.

Examples:

- 20 °C corresponds to a resistance from 2340...2680 ω
- 80 °C corresponds to a resistance from 290...330 ω

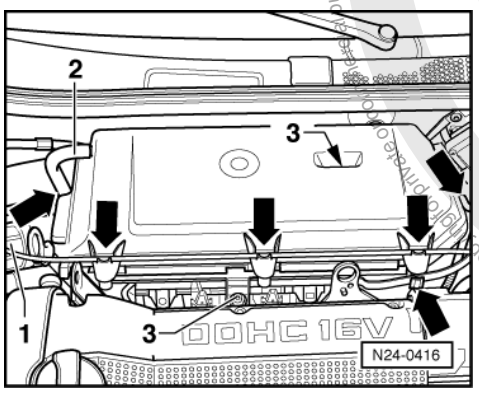

Protected by copyright. Copying for private or commercial purposes, in part or in whole, is not permitted unless authorised by Volkswagen AG. Volkswagen AG does not guarantee or accept any liability with respect to the correctness of information in this document. Copyright by Volkswagen AG.
satelettronica

-> Fig. 3 Removing air cleaner

- Release accelerator cable and earth strap from retainers -arrows-. Then pull off hoses -1- and -2-.
- Remove bolts -3- and take air cleaner off upwards.

1.8 - Safety precautions

Warning!
Fuel system is under pressure! Before opening the system place a cloth around the connection. Then release pressure by carefully loosening the connection.

To prevent injuries to persons and/or damage to the fuel injection and ignition system, the following must be noted:

- Do not touch or disconnect ignition wiring when the engine is running or being turned at starter speed.
- The ignition must be switched off before connecting or disconnecting injection or ignition system wiring or tester cables.

- If the engine is to be turned at starter speed, without starting, e.g. when checking compressions, pull plug off Hall sender (distributor).

Observe following if test and measuring instruments are required during a test drive:

- Test and measuring instruments must be secured to rear seat and operated by a 2nd person from this location.

  If test and measuring instruments are operated from front passenger's seat and the vehicle is involved in an accident, there is a possibility that the person sitting in this seat may receive serious injuries when the airbag is triggered.

1.9 - Rules for cleanliness

When working on the fuel supply/injection system, pay careful attention to the following "5 rules":

- Thoroughly clean all unions and the adjacent areas before disconnecting.
- Place parts that have been removed on a clean surface and cover. Do not use fluffy cloths!
- Carefully cover opened components or seal, if the repair cannot be carried out immediately.
- Only install clean components:
  Only unpack replacement parts immediately prior to installation.
  Do not use parts that have been stored loose (e.g. in tool boxes etc.).
- When the system is open:
  Do not work with compressed air if this can be avoided.
  Do not move vehicle unless absolutely necessary.

1.10 - Technical data

Engine code	**AFH**
Idling speed rpm	820...9201)2)
Engine control unit3)	
Control unit version	1AV
Part No.4)	030 906 030

Copyright by Volkswagen AG. Volkswagen AG does not guarantee or accept any liability with respect to the correctness of information in this document. Copying for private or commercial purposes, in part or in whole, is not permitted unless authorized by Volkswagen AG.

satelettronica

Engine code		AFH
Governed speed	rpm	6800...7100

1) Up-to-date specifications:

=> Exhaust emissions test binder

2) The control unit increases idling speed under following conditions:

- When the battery voltage is too low

- After a long full throttle drive and at higher temperatures

- When air conditioner is switched on

3) If replaced carry out basic setting => Page 37

4) Current situation see parts catalogue

1.11 - Performing basic setting

Note:

The basic setting with the ignition switched on, matches the engine control unit to the throttle valve control part.

Special tools, testers, measuring instruments and auxiliary items required

- Fault reader V.A.G 1551 or vehicle system tester V.A.G 1552 with cable V.A.G 1551/3

Test conditions

- No faults must be stored in fault memory
  => Page 3 , interrogating fault memory

Test sequence

- Connect the fault reader V.A.G 1551 (V.A.G 1552). Then switch ignition on and select engine control unit with the "Address word" 01.
  (Connecting fault reader and selecting engine control unit => Page 2 .)

-> Indicated on display:

```
Rapid data transfer      HELP
Select function XX
```

- Press keys 0 and 4 for the function "Introduction of basic setting" and confirm entry with Q key.

-> Indicated on display:

```
Basic setting      HELP
Input display group number XXX
```

- Press keys 0, 0 and 1 for "Display group number 1" and confirm entry with Q key.

-> Indicated on display:
(1...4 = Display zones)

```
System in basic setting 1
     1     2     3     4
```

Protected by copyright. Copyright by Volkswagen AG. Volkswagen AG does not guarantee or accept any liability with respect to the correctness of information in this document. Copyright by Volkswagen AG. Protected by copyright. Copying for private or commercial purposes, in part or in whole, is not permitted unless authorised by Volkswagen AG.
satelettronica

After pressing the Q key, the throttle valve positioner will be moved to the min., max. and three intermediate positions and the control unit will store each individual throttle valve angle in the non-volatile memory. This procedure lasts approx. 10 seconds. The throttle valve will then remain in the start position.

Note:

If the basic setting of the control unit is interrupted, the cause could be one of the following:

- Throttle valve cannot reach the mechanical stop because of contamination e.g. oil deposits or an incorrectly adjusted throttle cable.
- Battery voltage too low.
- Throttle valve control unit or wiring is defective. Checking => Page 43 .

After an interruption the fault "Basic setting not completed, fault in basic setting" is stored in fault memory. When next switching on ignition the basic setting is automatically performed again.

- End the engine basic setting by pressing the⇒ key.
- Press keys 0 and 6 for the function "End output" and confirm entry with the Q key.

If the throttle valve positioner does not move:

- Observe 8 digit number block in display zone 4. The 2nd, 3rd and 5th position from right must be at 0.
  Display: 00000000

Note:

If in display zone 4 a 1 is displayed in the mentioned positions then test prerequisites are not fulfilled:

=>Page 16 ; Significance of figures in 8 digit number block

All positions at 0:

- Check throttle valve control part
  => Page 43 .

1.12 - Checking Lambda probe and Lambda control

Special tools, testers, measuring instruments and auxiliary items required

- Fault reader V.A.G 1551 or vehicle system tester V.A.G 1552 with cable V.A.G 1551/3
- Test box V.A.G 1598/18
- Hand multimeter V.A.G 1526 or multimeter V.A.G 1715
- Adapter set V.A.G 1594
- Current flow diagram

Check conditions

- Basic setting OK.
- Exhaust system between cylinder head and catalyst free of leaks

Test sequence

- Connect fault reader V.A.G 1551 (V.A.G 1552). Start engine and select "Address word" 01 of engine control unit. When doing this the engine must be running at idling speed.
  (Connecting fault reader and selecting engine control unit => Page 2 .)

-> Indicated on display:

```
Rapid data transfer      HELP
Select function XX
```

- Press keys 0 and 8 for the function "Read measured value block" and confirm entry with Q key.

Protected by copyright. Copyright by Volkswagen AG. Volkswagen AG does not guarantee or accept any liability with respect to the correctness of information in this document. Copyright by Volkswagen AG. Reproduction for commercial purposes, in part or in whole, not permitted unless authorised by Volkswagen AG.
satelettronica

-> Indicated on display:

```
Read measured value block     HELP
Input display group number XXX
```

- Press keys 0, 0 and 1 for "Display group number 1" and confirm entry with Q key.

-> Indicated on display:
(1...4 = Display zones)

```
Read measured value block     1
     1     2     3     4
```

Only continue with the test when
- The coolant temperature is above 80 °C
  -Display zone 2-
- The engine has then run for a further 2 minutes at idling speed

- Note Lambda probe voltage in display zone 3. The voltage must fluctuate at least 30 times per minute
  in range of
  0... 1.0 V.

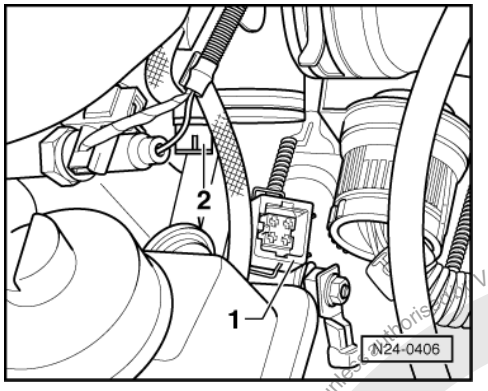

If the voltage change is slower, determine cause of fault. => Page 40 .
- -> Pull connector -1- off coolant temperature sender (G62) -2-. The probe voltage must increase
  and then decrease back to the old control range.

- Reconnect connector. The probe voltage must decrease
  and then increase to the old control range.

Note:
The throttle valve must not be operated during the check, otherwise the connector disconnected from the control unit will be recognised as a fault.
- Press ⇒ key.
- Press keys 0 and 6 for the function "End output" and confirm entry with the Q key.
- Switch off ignition

If no control is detected:

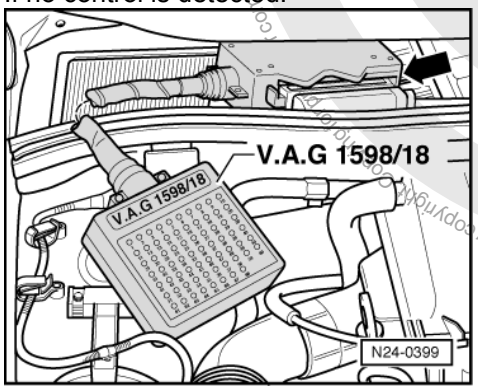

satelettronica
Protected by copyright. Copyright by Volkswagen AG. Volkswagen AG does not guarantee or accept any liability with respect to the correctness of information in this document. Copyright by Volkswagen AG.

- Check Lambda probe heating => Page 40 .

If Lambda probe heating is OK.:

- -> Connect test box V.A.G 1598/18 to control unit wiring loom.

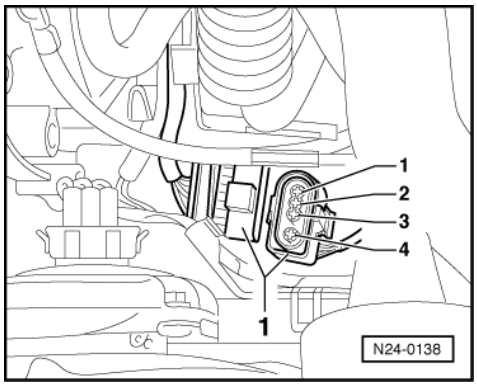

- -> Separate 4 pin connector to Lambda probe (G39) -1- (in front of gearbox).
- Check wiring between test box and connector for open circuit according to current flow diagram.
  Contact 3+socket 15
  Contact 4+socket 38
  Wire resistance: Max. 1.5 ω
- Check wiring at connector contacts 3+4 for short circuit to contacts 1+2 according to current flow diagram.
  Specification: ∞ω

If no wiring fault is detected:

- Renew Lambda probe (G39) =>Page 25 , item 23 .

Possible causes of fault if probe control frequency is too slow:

- The slots or holes in probe body are blocked
- The probe vent hole in area of connecting wire is blocked
- The probe has been overheated (glazed)
- The probe has been damaged by leaded fuel

1.13 - Checking Lambda probe heating

Special tools, testers, measuring instruments and auxiliary items required

- Test box V.A.G 1598/18
- Hand multimeter V.A.G 1526 or multimeter V.A.G 1715
- Adapter set V.A.G 1594
- Current flow diagram

Test conditions

- Fuel pump relay must be OK
- Fuse 18 must be OK.

Protected by copyright. Copyright by Volkswagen AG. Volkswagen AG does not guarantee or accept any liability with respect to the correctness of information in this document. Copyright by Volkswagen AG. Volkswagen AG does not permit unless specifically authorised, in any form or medium, whole or in part, for commercial purposes, including but not limited to, reproduction, distribution, adaptation, publication and broadcasting.
satelettronica

Checking voltage supply

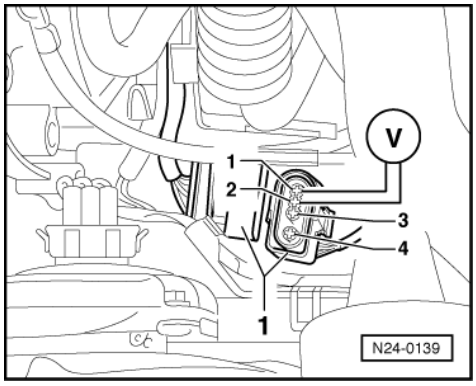

- -> Separate 4 pin connector to Lambda probe (G39) -1- (in front of gearbox).
- Connect multimeter using adapter cable from V.A.G 1594 to measure voltage on connector contacts 1+2.
- Start engine and measure voltage.
  Specification: at least 11 V
- Switch off ignition

If no voltage is present:

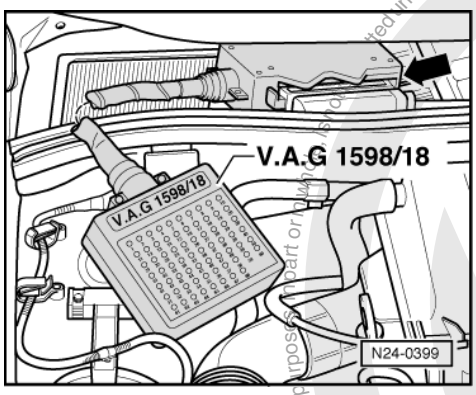

- -> Connect test box V.A.G 1598/18 to control unit wiring loom.
- Switch on ignition.
- Bridge test box sockets 1+25 with aux. cables from V.A.G 1594. The fuel pump must run.
- Observe display on multimeter.
  Specification: min. 11 V

If the specification is not obtained:

- Check wiring connections according to relay plate according to current flow diagram.

1.14 - Checking engine operating mode

Note:

Check whether engine control unit recognises the engine operating modes (idling speed, part throttle, full throttle, overrun).

Special tools, testers, measuring instruments and auxiliary items required

- Fault reader V.A.G 1551 or vehicle system tester V.A.G 1552 with cable V.A.G 1551/3

Test conditions

- Coolant temperature at least 80 °C

Protected by copyright. Copying for private or commercial purposes, in part or in whole, is not permitted unless authorised by Volkswagen AG. Volkswagen AG does not guarantee or accept any liability with respect to the correctness of information in this document. Copyright by Volkswagen AG.
satelettronica

Test sequence

- Connect fault reader V.A.G 1551 (V.A.G 1552). Start engine and select "Address word" 01 of engine control unit. When doing this the engine must be running at idling speed.
  (Connecting fault reader and selecting engine control unit => Page 2 .)

-> Indicated on display:

```
Rapid data transfer     HELP
Select function XX
```

- Press keys 0 and 8 for the function "Read measured value block" and confirm entry with Q key.

-> Indicated on display:

```
Read measured value block     HELP
Input display group number XXX
```

- Press keys 0, 0 and 4 for "Display group number 4" and confirm entry with Q key.

-> Indicated on display:
(1...4 = Display zones)

```
Read measured value block     4
     1     2     3     4
```

- Observe -8 digit number block- in display zone 4 :
  (The right-hand 4 digits are of no consequence)

Display in operating mode

◆ Idling:

2nd position from left must display 1
Display: 01000000

◆ Part throttle:

- Rev up evenly.

3rd position from left must display 1
Display:: 00100000

◆ Full throttle:

- Floor accelerator pedal and release.

4th position from left must briefly display 1
Display: 00010000

◆ Overrun mode:

- Raise engine speed to above 3000 rpm.
- Close throttle abruptly.

As long as the engine speed is above 1400 rpm 1st position from left must display 1
Display: 11000000 (briefly)

Note:

Below 1400 rpm idling speed is again recognised.

- Press ⇒ key.
- Press keys 0 and 6 for the function "End output" and confirm entry with the Q key.

Copyright by Volkswagen AG. Volkswagen AG does not guarantee or accept any liability with respect to the correctness of information in this document. Copyright by Volkswagen AG. Transmitted by copyright or privileged copyright, commercial use or in part or in whole is not permitted unless authorised by Volkswagen AG.
satelettronica

If the specifications are not attained:

- Interrogate fault memory, if necessary, repair fault and erase fault memory.
  => Page 3 , interrogating and erasing fault memory
- Check throttle valve potentiometer
  => Page 43 , Checking throttle valve control part.

1.15 - Checking throttle valve control part

Note:

If the throttle valve control part (J338) is removed and installed or replaced the basic setting must be performed => Page 37 .

Special tools, testers, measuring instruments and auxiliary items required

- Fault reader V.A.G 1551 or vehicle system tester V.A.G 1552 with cable V.A.G 1551/3
- Test box V.A.G 1598/18
- Hand multimeter V.A.G 1526 or multimeter V.A.G 1715
- Adapter set V.A.G 1594
- Current flow diagram

Checking idling switch

- Connect the fault reader V.A.G 1551 (V.A.G 1552). Then switch ignition on and select engine control unit with the "Address word" 01.
  (Connecting fault reader and selecting engine control unit => Page 2 .)

-> Indicated on display:

```
Rapid data transfer      HELP
Select function XX
```

- Press keys 0 and 8 for the function "Read measured value block" and confirm entry with Q key.

-> Indicated on display:

```
Read measured value block      HELP
Input display group number XXX
```

- Press keys 0, 0 and 1 for "Display group number 1" and confirm entry with Q key.

-> Indicated on display:
(1...4 = Display zones)

```
Read measured value block 1
     1     2     3     4
```

- Observe -8 digit number block- in display zone 4 :
  (The right-hand 4 digits are of no consequence)

  4th position from left with closed throttle valve must display 0
  Display: 00000000

- Slowly open throttle valve. After free travel, a stop is reached when opening throttle valve further the 4th position from left must jump to 1
  Display: 00010000

If the specifications are not obtained:

- Remove air cleaner => Page 36 , Fig. 3 .

Protected by copyright. Copyright by Volkswagen AG. Volkswagen AG does not guarantee or accept any liability with respect to the correctness of information in this document. Copyright by Volkswagen AG. Reproduction or publication in whole or in part for commercial purposes, in any form or by any means, is permitted only with the express authorisation of Volkswagen AG.

satelettronica

Display	Cause	Continuation of check
Always 1	Open circuit or short to positive	=> Page 44
Always 0	Short to earth	=> Page 44

Continuation of check when display is always at 1

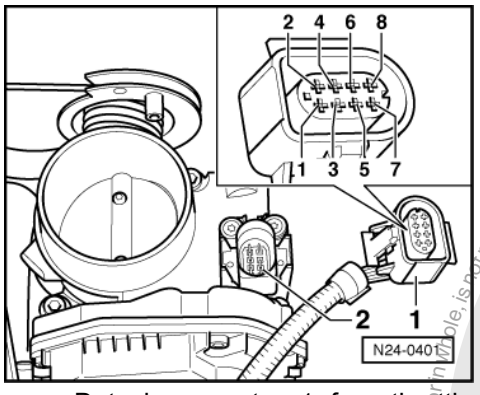

- -> Detach connector -1- from throttle valve control part -2-.
- Bridge connector contacts 3+7 with aux. cables from V.A.G 1594 and observe display.

Display 0:

- Press ⇒ key.
- Press keys 0 and 6 for the function "End output" and confirm entry with the Q key.
- Switch off ignition
- Replace throttle valve control part
  =>Page 30 , item 4 .

Display 1:

- Press ⇒ key.
- Press keys 0 and 6 for the function "End output" and confirm entry with the Q key.
- Switch off ignition
- Check voltage supply of throttle valve control part and wiring to control unit => Page 48

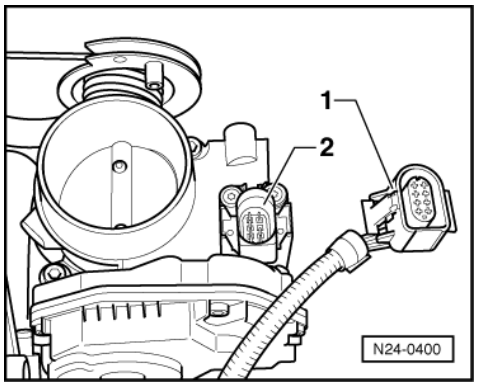

If the voltage supply and wirings are OK:

- Renew engine control unit
  => Page 26 , item 29

Continuation of check when display constantly shows 0

- -> Detach connector -1- from throttle valve control part -2-.

Protected by copyright. Copying for private or commercial purposes, in part or in whole, is not permitted unless authorised by Volkswagen AG. Volkswagen AG does not guarantee or accept any liability with respect to the correctness of information in this document. Copyright by Volkswagen AG.
satelettronica

Display 1:
- Press ⇒ key.
- Press keys 0 and 6 for the function "End output" and confirm entry with the Q key.
- Switch off ignition
- Replace throttle valve control part
  =>Page 30 , item 4 .

Display 0:
- Press ⇒ key.
- Press keys 0 and 6 for the function "End output" and confirm entry with the Q key.
- Switch off ignition
- Check voltage supply of throttle valve control part and wiring to control unit => Page 48 .

If the voltage supply and wirings are OK:
- Renew engine control unit
  => Page 26 , item 29

Checking throttle valve positioner and throttle valve positioner potentiometer

Test conditions
- Coolant temperature at least 80 °C

Test sequence
- Connect fault reader V.A.G 1551 (V.A.G 1552). Start engine and select "Address word" 01 of engine control unit. When doing this the engine must be running at idling speed.
  (Connecting fault reader and selecting engine control unit => Page 2 .)

-> Indicated on display:

```
Rapid data transfer      HELP
Select function XX
```

- Press keys 0 and 8 for the function "Read measured value block" and confirm entry with Q key.

-> Indicated on display:

```
Read measured value block      HELP
Input display group number XXX
```

- Press keys 0, 0 and 3 for "Display group number 3" and confirm entry with Q key.

-> Indicated on display:
(1...4 = Display zones)

```
Read measured value block 3
     1     2     3     4
```

- Check throttle valve positioner duty cycle in display zone 4. The duty cycle must fluctuate in range 5...30 %.

If the specification is not obtained:
- Press ⇒ key.
- Press keys 0 and 6 for the function "End output" and confirm entry with the Q key.
- Switch off ignition
- Remove air cleaner => Page 36 , Fig. 3 .

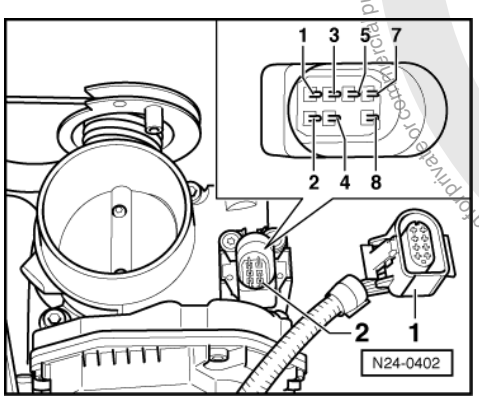

satelettronica
Protected by copyright. Copying for private or commercial purposes, in part or in whole, is not permitted unless authorised by Volkswagen AG. Volkswagen AG does not guarantee or accept any liability with respect to the correctness of information in this document. Copyright by Volkswagen AG.

- -> Detach connector -1- from throttle valve control part -2-.
- Measure throttle valve positioner resistance between connector contacts 1+2.
  Specification: 3...200 ω
- Check voltage supply of throttle valve control part and wiring to control unit => Page 48 .

If no fault is detected:

- Replace throttle valve control part
  =>Page 30 , item 4 .

Checking throttle valve potentiometer

Test conditions

- Coolant temperature at least 80 °C

Test sequence

- Connect the fault reader V.A.G 1551 (V.A.G 1552). Then switch ignition on and select engine control unit with the "Address word" 01.
  (Connecting fault reader and selecting engine control unit => Page 2 .)

-> Indicated on display:

```
Rapid data transfer     HELP
Select function XX
```

- Press keys 0 and 8 for the function "Read measured value block" and confirm entry with Q key.

-> Indicated on display:

```
Read measured value block     HELP
Input display group number XXX
```

- Press keys 0, 0 and 3 for "Display group number 3" and confirm entry with Q key.

-> Indicated on display:
(1...4 = Display zones)

```
Read measured value block 3
     1     2     3     4
```

- Read off throttle valve angle in display zone 3.The throttle valve opening angle is displayed in starting position.
- Slowly open throttle valve fully and observe angle display in display zone 3. The figure must increase uniformly over
  the complete range.
- Press ⇒ key.
- Press keys 0 and 6 for the function "End output" and confirm entry with the Q key.
- Switch off ignition

If the figure does not increase uniformly:

- Replace throttle valve control part
  =>Page 30 , item 4 .

If the display constantly shows 0 <° or is above 90 <°:

- Remove air cleaner => Page 36 , Fig. 3 .

Display	Cause	Continuation of check
0 <°	Open circuit or short to positive	=> Page 47

Protected by copyright. Copying for private or commercial purposes, in part or in whole, is not permitted unless authorised by Volkswagen AG. Volkswagen AG does not guarantee or accept any liability with respect to the correctness of information in this document. Copyright by Volkswagen AG.
satelettronica

Display	Cause	Continuation of check
above 90 <°	Short to earth	=> Page 47

Continuation of check when display 0 <°:

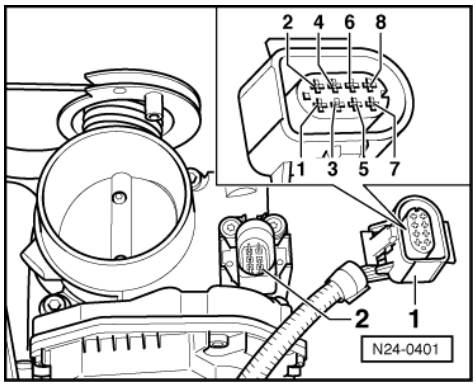

- -> Detach connector -1- from throttle valve control part -2-.
- Bridge connector contacts 5+7 with auxiliary cables from V.A.G 1594 and observe display.

Display above 90 <°:

- Press ⇒ key.
- Press keys 0 and 6 for the function "End output" and confirm entry with the Q key.
- Switch off ignition
- Replace throttle valve control part
  =>Page 30 , item 4 .

Display 0 <°:

- Press ⇒ key.
- Press keys 0 and 6 for the function "End output" and confirm entry with the Q key.
- Switch off ignition
- Check voltage supply of throttle valve control part and wiring to control unit => Page 48 .

If the voltage supply and wirings are OK:

- Renew engine control unit
  => Page 26 , item 29

Continuation of check when display is above 90 <°:

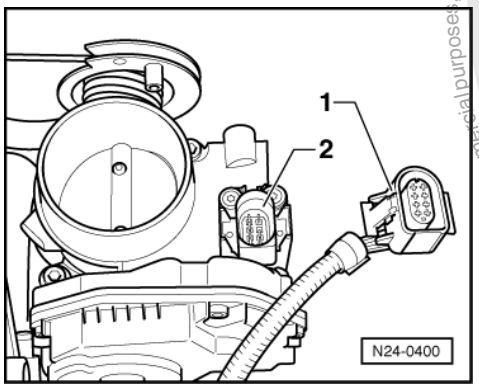

- -> Detach connector -1- from throttle valve control part -2-.

Display 0 <°:

- Press ⇒ key.
- Press keys 0 and 6 for the function "End output" and confirm entry with the Q key.
- Switch off ignition

satelettronica
Protected by copyright. Copying for private or commercial purposes, in part or in whole, is not permitted unless authorised by Volkswagen AG. Volkswagen AG does not guarantee or accept any liability with respect to the correctness of information in this document. Copyright by Volkswagen AG.

- Replace throttle valve control part
  =>Page 30 , item 4 .

Display above 90 <°:

- Press ⇒ key.
- Press keys 0 and 6 for the function "End output" and confirm entry with the Q key.
- Switch off ignition
- Check voltage supply of throttle valve control part and wiring to control unit => Page 48 .

If the voltage supply and wirings are OK:

- Renew engine control unit
  => Page 26 , item 29

Checking voltage supply and wiring to control unit

- Remove air cleaner => Page 36 , Fig. 3 .

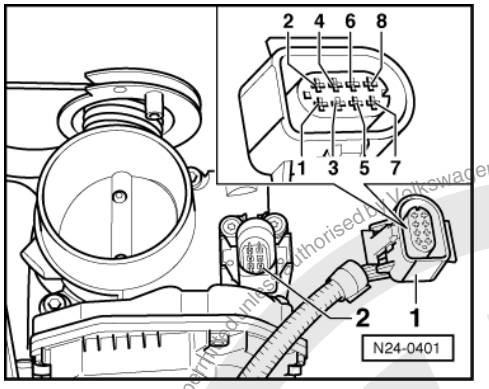

- -> Detach connector -1- from throttle valve control part -2-.
- Connect multimeter to measure voltage at connector contacts 4+7.
- Switch on ignition.
  Specification: min. 4.5 V
- Switch off ignition
- Connect multimeter to measure voltage at connector contacts 3+7.
- Switch on ignition.
  Specification: min. 9 V
- Switch off ignition

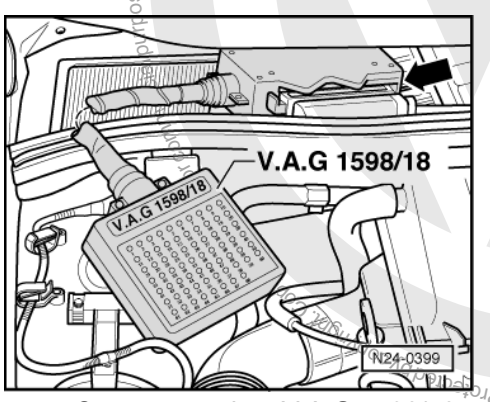

- -> Connect test box V.A.G 1598/18 to control unit wiring loom.

satelettronica
Copyrighted material authorised by Volkswagen AG. Volkswagen AG does not guarantee or accept any liability with respect to the correctness of information in this document. Copyright by Volkswagen AG.

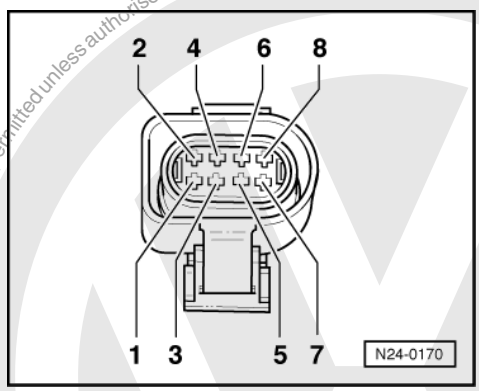

- -> Check wiring between test box and connector for open circuit according to current flow diagram.
  Contact 1+socket 2
  Contact 2+socket 26
  Contact 3+socket 10
  Contact 4+socket 14
  Contact 5+socket 41
  Contact 7+socket 17
  Contact 8+socket 16
  Wire resistance: Max. 1.5 ω
- Additionally check wires for short to one another.
  Specification: ∞ω

If no wiring fault is detected:

- Check voltage supply of engine control unit => Page 58 .

1.16 - Checking intake manifold pressure sender

Special tools, testers, measuring instruments and auxiliary items required

- Fault reader V.A.G 1551 or vehicle system tester V.A.G 1552 with cable V.A.G 1551/3
- Hand multimeter V.A.G 1526 or multimeter V.A.G 1715
- Test box V.A.G 1598/18
- Adapter set V.A.G 1594
- Current flow diagram

Test sequence

- Connect fault reader V.A.G 1551 (V.A.G 1552). Start engine and select "Address word" 01 of engine control unit. When doing this the engine must be running at idling speed.
  (Connecting fault reader and selecting engine control unit => Page 2 .)

-> Indicated on display:

```
Rapid data transfer      HELP
Select function XX
```

- Press keys 0 and 8 for the function "Read measured value block" and confirm entry with Q key.

-> Indicated on display:

```
Read measured value block      HELP
Input display group number XXX
```

- Press keys 0, 0 and 3 for "Display group number 3" and confirm entry with Q key.

-> Indicated on display:
(1...4 = Display zones)

Protected by copyright. Copyright by Volkswagen AG. Volkswagen AG does not guarantee or accept any liability with respect to the correctness of information in this document. Copyright by Volkswagen AG. Protected by copyright. Copying for private or commercial purposes, in part or in whole, is not permitted unless authorised by Volkswagen AG.

satelettronica

```
Read measured value block 3
     1     2     3     4
```

- Read off the displayed value for engine load in display zone 2 and note this value.
- Briefly open throttle valve. The engine throttle value must increase briefly.

If the display shows constantly 0 % or 100 %:

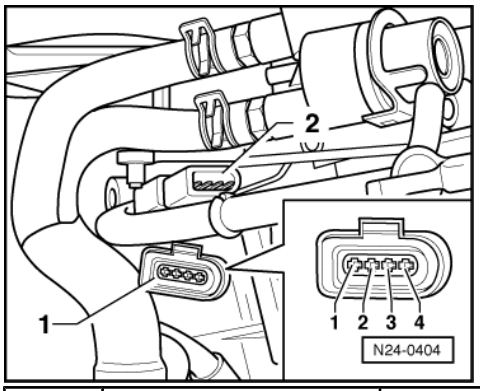

Display	Cause	Continuation of check
0 %	Open circuit or short to earth	=> Page 50
100 %	Short to positive	=> Page 51

Continuation of check when display 0%:

- -> Pull connector -1- off intake manifold pressure sender (G71) with intake air temperature sender (G42) -2- (engine stops).
- Bridge connector contacts 3+4.

Display 100 %:

- Press ⇒ key.
- Press keys 0 and 6 for the function "End output" and confirm entry with the Q key.
- Switch off ignition
- Renew the intake manifold pressure sender (G71) with intake air temperature sender (G42) -2- => Page 31 , item 9 .

Display 0 %:

- Press ⇒ key.
- Press keys 0 and 6 for the function "End output" and confirm entry with the Q key.
- Switch off ignition

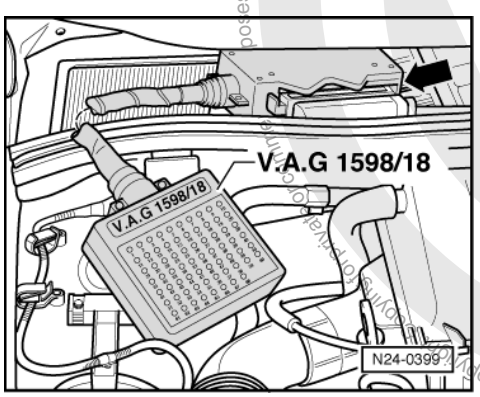

- -> Connect test box V.A.G 1598/18 to control unit wiring loom.
- Check wiring between test box and connector for open circuit according to current flow diagram.
  Contact 3+socket 37
  Contact 4+socket 18

satelettronica

Wire resistance: Max. 1.5 ω
- Additionally check wiring contact 4 for short to earth and to contact 1.
  Specification: ∞ω

If no wiring fault is detected:

- Renew engine control unit
  => Page 26 , item 29

Continuation of check when display 100 %:

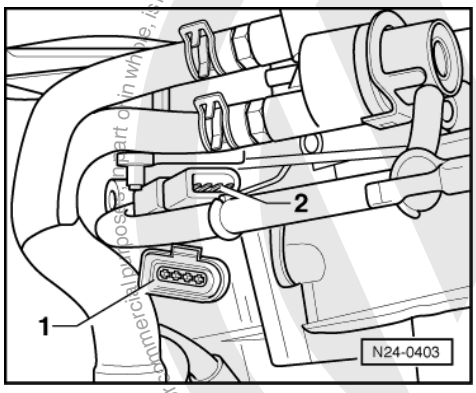

- -> Pull connector -1- off intake manifold pressure sender (G71) with intake air temperature sender (G42) -2- (engine stops).

Display 0 %:

- Press ⇒ key.
- Press keys 0 and 6 for the function "End output" and confirm entry with the Q key.
- Switch off ignition
- Renew the intake manifold pressure sender (G71) with intake air temperature sender (G42) -2-
  => Page 31 , item 9 .

Display 100 %:

- Press ⇒ key.
- Press keys 0 and 6 for the function "End output" and confirm entry with the Q key.
- Switch off ignition
- Pull connector off engine control unit.

- Check wiring to control unit connector at 4 pin connector contact 4 for short to wire contact 3 and to battery positive.
  Specification: ∞ω

If no wiring fault is detected:

- Renew engine control unit
  => Page 26 , item 29

1.17 - Checking speed signal

Special tools, testers, measuring instruments and auxiliary items required

- Fault reader V.A.G 1551 or vehicle system tester V.A.G 1552 with cable V.A.G 1551/3
- Hand multimeter V.A.G 1526 or multimeter V.A.G 1715
- Test box V.A.G 1598/18
- Adapter set V.A.G 1594
- Current flow diagram

satelettronica

Test conditions

- Speedometer must be OK., checking speedometer:

=> Repair group 90; Electrical system Electrical system

Test sequence

Note:

To check the speed signal the vehicle must be driven. To do this a second person is necessary.

Warning! Secure fault reader to rear seat and operate from this position.

- Connect fault reader V.A.G 1551 (V.A.G 1552). Start engine and select "Address word" 01 of engine control unit. When doing this the engine must be running at idling speed.
  (Connecting fault reader and selecting engine control unit => Page 2 .)

-> Indicated on display:

```
Rapid data transfer      HELP
Select function XX
```

- Press keys 0 and 8 for the function "Read measured value block" and confirm entry with Q key.

-> Indicated on display:

```
Read measured value block      HELP
Input display group number XXX
```

- Press keys 0, 0 and 4 for "Display group number 4" and confirm entry with Q key.

-> Indicated on display:
(1...4 = Display zones)

```
Read measured value block 4
     1      2      3      4
```

- Carry out test drive and when doing use a 2nd person to observe display.
- Note display value with vehicle stationary.
- Drive off slowly. The displayed value must decrease.
- Press the ⇒key.
- Press keys 0 and 6 for the function "End output" and confirm entry with the Q key.

If the display does not change:

- Switch off ignition

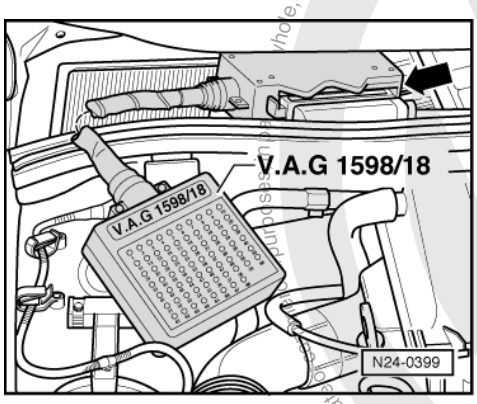

- -> Connect test box V.A.G 1598/18 to control unit wiring loom.
- Set multimeter scale to measure voltage and connect between test box sockets 1+36.
- Switch on ignition.
- Lift front left-hand wheel.

Protected by copyright. Copyright by Volkswagen AG. Volkswagen AG does not guarantee or accept any liability with respect to the correctness of information in this document. Copyright by Volkswagen AG.
satelettronica

- Rotate front wheel and observe voltage display.
  Specification: between 0 and at least 4 Volt fluctuating

If the display does not fluctuate:

- Check wiring to speedometer or to speedometer sender.

=> Current flow diagrams, Electrical fault finding and Fitting locations binder

1.18 - Checking coolant temperature sender

Special tools, testers, measuring instruments and auxiliary items required

- Fault reader V.A.G 1551 or vehicle system tester V.A.G 1552 with cable V.A.G 1551/3
- Test box V.A.G 1598/18
- Hand multimeter V.A.G 1526 or multimeter V.A.G 1715
- Adapter set V.A.G 1594
- Current flow diagram

Test sequence

- Connect fault reader V.A.G 1551 (V.A.G 1552). Start engine and select "Address word" 01 of engine control unit. When doing this the engine must be running at idling speed.
  (Connecting fault reader and selecting engine control unit => Page 2 .)

-> Indicated on display:

```
Rapid data transfer      HELP
Select function XX
```

- Press keys 0 and 8 for the function "Read measured value block" and confirm entry with Q key.

-> Indicated on display:

```
Read measured value block      HELP
Input display group number XXX
```

- Press keys 0, 0 and 1 for "Display group number 1" and confirm entry with Q key.

-> Indicated on display:
(1...4 = Display zones)

```
Read measured value block      1
     1      2      3      4
```

- Note coolant temperature value in display zone 2.

Display	Cause	Continuation of check
-40 °C	Open circuit or short to positive	=> Page 54
Approx. 128 °C	Short to earth	=> Page 55
Approx. coolant temperature1)	---	Only if sporadic faults have been detected:2) => Page 55

1) If a temperature is displayed which deviates greatly from the ambient temperature of the sender, check sender wiring for transfer resistances.

Protected by copyright. Copyright by Volkswagen AG. Volkswagen AG does not guarantee or accept any liability with respect to the correctness of information in this document. Copyright by Volkswagen AG. Reproduction, distribution or commercial use of this document, in whole or in part, is not authorised by Volkswagen AG unless specifically authorised.
satelettronica

2) Check is only possible when the engine is cold.

Continuation of check when display -40 °C:

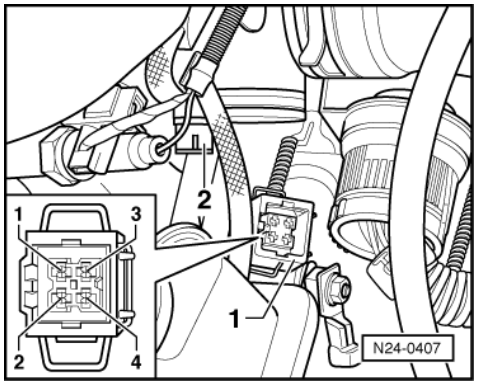

- -> Pull 4 pin connector -1- off coolant temperature sender (G62) -2-.
- Bridge connector contacts 1+3 using aux cables from V.A.G 1594 and observe display.

Display approx. 128 ° C:

- Press ⇒ key.
- Press keys 0 and 6 for the function "End output" and confirm entry with the Q key.
- Switch off ignition
- Renew coolant temperature sender -2- => Page 24 , item 20 .

Display -40 ° C:

- Press ⇒ key.
- Press keys 0 and 6 for the function "End output" and confirm entry with the Q key.
- Switch off ignition

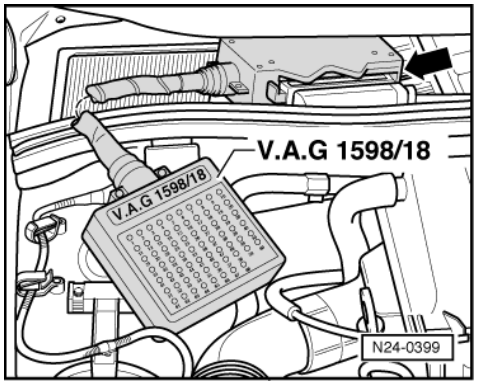

- -> Connect test box V.A.G 1598/18 to control unit wiring loom.
- Check wire between test box socket 42 and 4 pin connector contact 3 for open circuit according to current flow diagram.
  Wire resistance: Max. 1.5 ω
- Check wiring additionally for short circuit to battery positive.
  Specification: ∞ω
- Check wire between test box socket 17 and 4 pin connector contact 1 for open circuit according to current flow diagram.
  Wire resistance: Max. 1.5 ω

If no fault in wire is detected:

Protected by copyright. Copying for private or commercial purposes, in part or in whole, is not permitted unless authorised by Volkswagen AG. Volkswagen AG does not guarantee or accept any liability with respect to the correctness of information in this document. Copyright by Volkswagen AG.
satelettronica

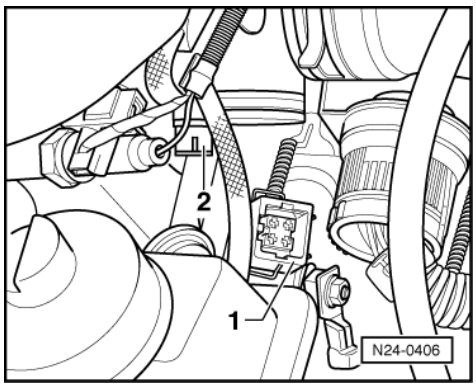

- Renew engine control unit
  => Page 26 , item 29

Continuation of check when display 128 °C:

- -> Pull 4 pin connector -1- off coolant temperature sender (G62) -2-.

Display -40 ° C:

- Press ⇒ key.
- Press keys 0 and 6 for the function "End output" and confirm entry with the Q key.
- Switch off ignition
- Renew coolant temperature sender -2- => Page 24 , item 20 .

Display approx. 128 ° C:

- Press ⇒ key.
- Press keys 0 and 6 for the function "End output" and confirm entry with the Q key.
- Switch off ignition
- Pull connector off engine control unit.
- Check wire between control unit connector and 4 pin connector contact 3 for short to wire contact 1 and to vehicle earth, according to current flow diagram.
  Specification: ∞ω

If no fault in wire is detected:

- Renew engine control unit
  => Page 26 , item 29

Continuation of check when display = coolant temperature:

Functional check of sender

- Observe coolant temperature value in display zone 2, whilst engine is running. The temperature figure must increase uniformly and without interruption.

Notes:

- If the display on fault reader jumps by 2...5 °C, it is a control unit fault and not caused by a defective sender.
- If irregular engine running occurs in certain temperature ranges and the temperature figure does not increase without interruption, the temperature signal is temporarily interrupted and the sender must be renewed.

- Press ⇒ key.
- Press keys 0 and 6 for the function "End output" and confirm entry with the Q key.

satelettronica
Protected by copyright. Copying for private or commercial purposes, in part or in whole, is not permitted unless authorised by Volkswagen AG. Volkswagen AG does not guarantee or accept any liability with respect to the correctness of information in this document. Copyright by Volkswagen AG.

1.19 - Checking intake air temperature sender

Special tools, testers, measuring instruments and auxiliary items required

- Fault reader V.A.G 1551 or vehicle system tester V.A.G 1552 with cable V.A.G 1551/3
- Test box V.A.G 1598/18
- Hand multimeter V.A.G 1526 or multimeter V.A.G 1715
- Adapter set V.A.G 1594
- Current flow diagram
- Chilling spray (commercially available)

Test sequence

- Connect the fault reader V.A.G 1551 (V.A.G 1552). Then switch ignition on and select engine control unit with the "Address word" 01.
  (Connecting fault reader and selecting engine control unit => Page 2 .)

-> Indicated on display:

```
Rapid data transfer      HELP
Select function XX
```

- Press keys 0 and 8 for the function "Read measured value block" and confirm entry with Q key.

-> Indicated on display:

```
Read measured value block      HELP
Input display group number XXX
```

- Press keys 0, 0 and 2 for "Display group number 2" and confirm entry with Q key.

-> Indicated on display:
(1...4 = Display zones)

```
Read measured value block 2
     1      2      3      4
```

- Read off intake air temperature value in display zone 4.

Display	Cause	Continuation of check
-40 °C	Open circuit or short to positive	=> Page 56
129 °C	Short to earth	=> Page 57
Approx. ambient temperature1)	---	=> Page 58

1) If a temperature is displayed which is below the ambient air temperature of the sender, check sender wiring for transfer resistances. Note when doing this that sender is heated from external sources, e.g. radiated heat when engine is not running.

Continuation of check when display -40 °C:

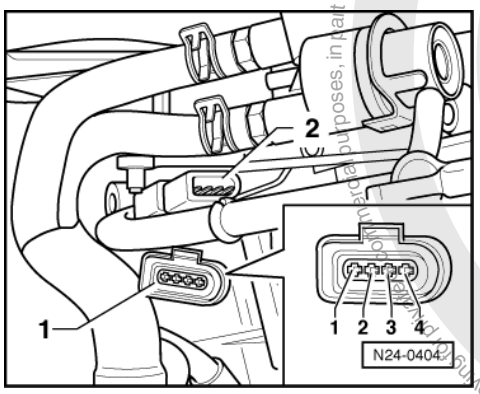

satelettronica
Protected by copyright. Copyright by Volkswagen AG.
Copyright by Volkswagen AG. Volkswagen AG does not guarantee or accept any liability with respect to the correctness of information in this document.
Copyright by Volkswagen AG. Reproduction and distribution, in part or in whole, for commercial purposes, is not permitted unless authorised by Volkswagen AG.

- -> Pull connector -1- off intake air temperature sender (G42) with intake manifold pressure sender (G71) -2-.
- Bridge connector contacts 1+2 using aux. cables from V.A.G 1594 and observe display.

Display 129 ° C:

- Press ⇒ key.
- Press keys 0 and 6 for the function "End output" and confirm entry with the Q key.
- Switch off ignition
- Renew intake air temperature sender (G42) with intake manifold pressure sender -2- =>Page 31 , item 9 .

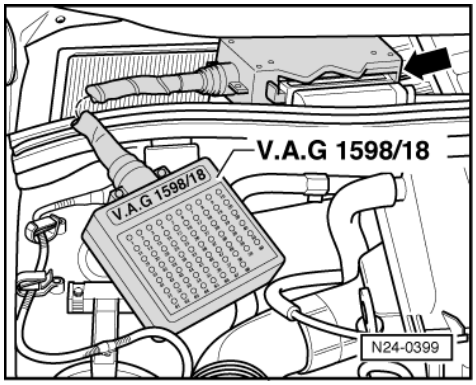

Display -40 ° C:

- Press ⇒ key.
- Press keys 0 and 6 for the function "End output" and confirm entry with the Q key.
- Switch off ignition
- -> Connect test box V.A.G 1598/18 to control unit wiring loom.
- Check wire between test box socket 43 and 4 pin connector contact 2 for open circuit according to current flow diagram.
  Wire resistance: Max. 1.5 ω
- Check wiring additionally for short circuit to battery positive.
  Specification: ∞ω
- Check wire between test box socket 17 and 4 pin connector contact 1 for open circuit according to current flow diagram.
  Wire resistance: Max. 1.5 ω

If no fault in wire is detected:

- Renew engine control unit => Page 26 , item 29

Continuation of check when display 129 °C:

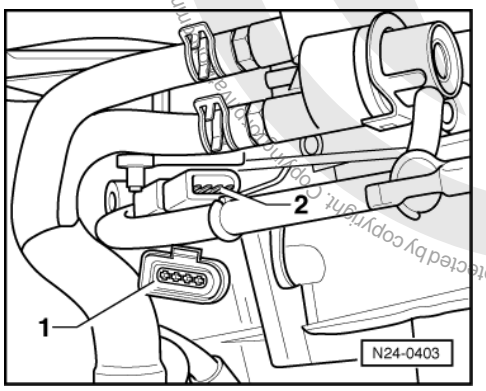

- -> Pull connector -1- off intake air temperature sender (G42) with intake manifold pressure sender (G71) -2-.

satelettronica
Protected by copyright. Copyright by Volkswagen AG. Volkswagen AG does not guarantee or accept any liability with respect to the correctness of information in this document. Copyright by Volkswagen AG.

Display -40 ° C:

- Press ⇒ key.
- Press keys 0 and 6 for the function "End output" and confirm entry with the Q key.
- Switch off ignition
- Renew intake air temperature sender (G42) with intake manifold pressure sender -2- =>Page 31 , item 9 .

Display 129 ° C:

- Press ⇒ key.
- Press keys 0 and 6 for the function "End output" and confirm entry with the Q key.
- Switch off ignition
- Pull connector off engine control unit.
- Check wiring to control unit connector at 4 pin connector contact 2 for short to wire contact 1 and to vehicle earth.
  Specification: ∞ω

If no wiring fault is detected:

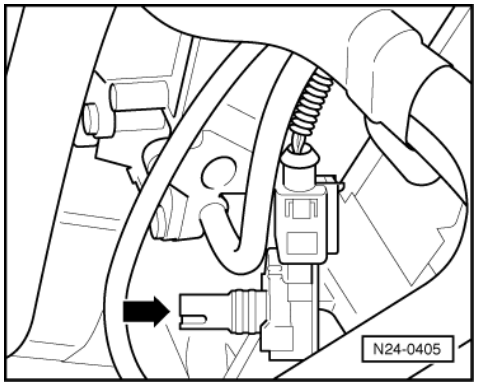

- Renew engine control unit
  => Page 26 , item 29

Continuation of check when display = ambient temperature:

- -> Remove intake air temperature sender together with intake manifold pressure sender (connector remains connected).
- Note intake air temperature value in display zone 4.
- Spray sender with commercial chilling agent whilst observing the temperature value. The temperature value must
  decrease.
- Press ⇒key.
- Press keys 0 and 6 for the function "End output" and confirm entry with the Q key.

1.20 - Checking control unit voltage supply

Special tools, testers, measuring instruments and auxiliary items required

- Fault reader V.A.G 1551 or vehicle system tester V.A.G 1552 with cable V.A.G 1551/3
- Test box V.A.G 1598/18
- Hand multimeter V.A.G 1526 or multimeter V.A.G 1715
- Adapter set V.A.G 1594
- Current flow diagram

Check conditions

- Battery voltage at least 11 V.

Protected by copyright. Copying for private or commercial purposes, in part or in whole is not permitted unless authorised by Volkswagen AG. Volkswagen AG does not guarantee or accept any liability with respect to the correctness of information in this document. Copyright by Volkswagen AG.
satelettronica

- Alternator must be OK

Test sequence

- Connect fault reader V.A.G 1551 (V.A.G 1552). Start engine and select "Address word" 01 of engine control unit. When doing this the engine must be running at idling speed.
  (Connecting fault reader and selecting engine control unit => Page 2 .)

-> Indicated on display:

```
Rapid data transfer        HELP
Select function XX
```

- Press keys 0 and 8 for the function "Read measured value block" and confirm entry with Q key.

-> Indicated on display:

```
Read measured value block      HELP
Input display group number XXX
```

- Press keys 0, 0 and 2 for "Display group number 2" and confirm entry with Q key.

-> Indicated on display:
(1...4 = Display zones)

```
Read measured value block 2
     1      2      3      4
```

- Read off display values in display zone 3.
  Specification: constantly approx. battery voltage
- Press ⇒key.
- Press keys 0 and 6 for the function "End output" and confirm entry with the Q key.

If the displayed figure fluctuates or the battery voltage is not attained:

- Switch off ignition

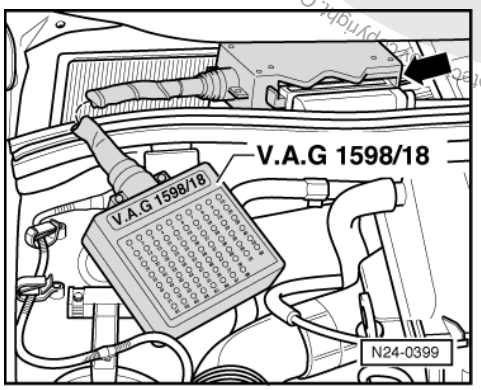

- -> Connect test box V.A.G 1598/18 to control unit wiring loom.
- Measure supply voltage between test box sockets 1+21 using multimeter and adapter cables from V.A.G 1594:
  Specification: at least 11 V
- Switch on ignition.
- Measure supply voltage between test box sockets 1+23 using multimeter and adapter cables from V.A.G 1594:
  Specification: at least 11 V

If the specifications are not attained:

- Check wiring connections according to relay plate according to current flow diagram.

satelettronica

1.21 - Matching engine control unit to electronic immobilizer

Copyright. Copyright by Volkswagen AG. Volkswagen AG does not guarantee or accept any liability with respect to the correctness of information in this document. Copying or distribution of this document, in whole or in part, is not permitted unless authorised by Volkswagen AG.

Special tools, testers, measuring instruments and auxiliary items required

- Fault reader V.A.G 1551 or vehicle system tester V.A.G 1552 with cable V.A.G 1551/3

Test conditions

- Authorized vehicle key required.

Work sequence

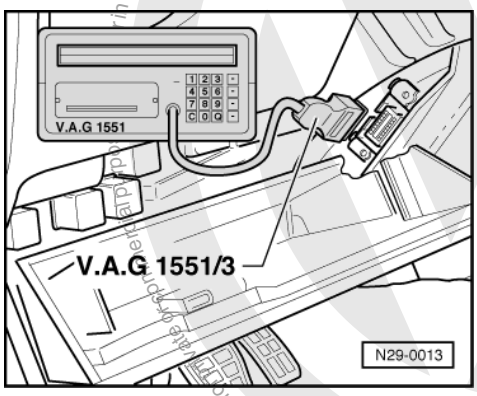

- -> Fold driver's side stowage compartment down.
- Connect fault reader V.A.G 1551 or vehicle system tester V.A.G 1552 with cable V.A.G 1551/3.
- Switch on ignition.
- Operate fault reader or vehicle system tester taking into account the information on the display:
- Press key 1 for "Rapid data transfer".
- Press keys 2 and 5 for address word "Immobilizer" and confirm entry with Q key.
- After the immobilizer control unit has registered, press ⇒ key.

-> Indicated on display:

```
Rapid data transfer     HELP
Select function XX
```

- Press keys 1 and 0 for function "Adaption" and confirm entry with Q key.

-> Indicated on display:

```
Adaption
Feed in channel number XX
```

- Press key 0 twice for "Channel number 0" and confirm entry with Q key.

-> Indicated on display:

```
Adaption     Q
Erase learnt values?
```

- Confirm entry by pressing Qkey.

-> Indicated on display:

```
Adaption
Learnt values have been erased
```

- Conclude adaption by pressing ⇒ key.
- Press keys 0 and 6 for the function "End output" and confirm entry with the Q key.
- Switch off ignition

satelettronica

Note:
The identity of the engine control unit is read into the immobilizer control unit when next switching the ignition on.

1.22 - Checking air conditioner and air conditioner compressor signals

These signals from the air conditioner cause the initial control value for the idling stabilization to be increased when the air conditioner compressor switches in. Thereby the idling stabilization remains in the middle of the regulating range.

Special tools, testers, measuring instruments and auxiliary items required

- Fault reader V.A.G 1551 or vehicle system tester V.A.G 1552 with cable V.A.G 1551/3
- Test box V.A.G 1598/18
- Hand multimeter V.A.G 1526 or multimeter V.A.G 1715
- Adapter set V.A.G 1594
- Current flow diagram

Test conditions

- Air conditioner functioning OK.
- Air conditioner must be switched off
- No faults must be stored in fault memory
  => Page 3 , interrogating fault memory
- Vehicle at room temperature (warmer than + 15 °C).

Test sequence

- Connect fault reader V.A.G 1551 (V.A.G 1552). Start engine and select "Address word" 01 of engine control unit. When doing this the engine must be running at idling speed.
  (Connecting fault reader and selecting engine control unit => Page 2 .)

-> Indicated on display:

```
Rapid data transfer      HELP
Select function XX
```

- Press keys 0 and 8 for the function "Read measured value block" and confirm entry with Q key.

-> Indicated on display:

```
Read measured value block      HELP
Input display group number XX
```

- Press keys 0 and 1 for "Display group number 01" and confirm entry with Q key.

-> Indicated on display:
(1...4 = Display zones)

```
Read measured value block      1
     1     2     3     4
```

- Observe 8 digit number block in display zone 4. 3rd position from left must display 0.
  Display: 00000000
- Switch on air conditioner. Adjust lowest temperature and highest blower stage.

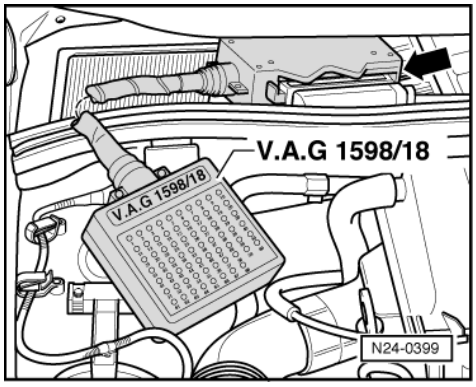

Protected by copyright. Copying for private or commercial purposes, in part or in whole, is not permitted unless authorised by Volkswagen AG. Volkswagen AG does not guarantee or assume any liability with respect to the correctness of information in this document. Copyright by Volkswagen AG.
satelettronica

3rd position from left must now display 1
Display: 00100000

If the display does not change:
- -> Connect test box V.A.G 1598/18 to control unit wiring loom.

- Check wiring between test box sockets 33 and 35 and the air conditioner for open circuit according to current flow diagram.
  Wire resistance: Max. 1.5 ω

1.23 - Checking injectors

Checking activation
Special tools, testers, measuring instruments and auxiliary items required
- Test box V.A.G 1598/18
- Hand multimeter V.A.G 1526 or multimeter V.A.G 1715
- Diode test lamp V.A.G 1527
- Adapter set V.A.G 1594
- Current flow diagram

Check conditions
- Hall sender in distributor must be OK.
- Fuel pump relay must be OK

Test sequence
- Remove air cleaner => Page 36 , Fig. 3 .

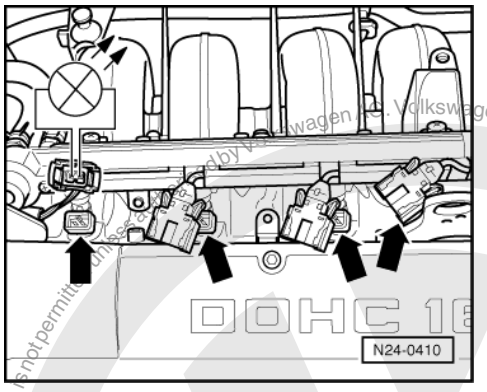

- -> Pull connector off injectors -arrows-.
- Connect diode test lamp V.A.G 1527 using aux. cables from V.A.G 1594 to connector contacts of Cyl. 1.
- Operate starter.
  The LED must flicker
- Repeat check at the injector connectors Cyl. 2...4.

The LED does not flicker on any cylinder:

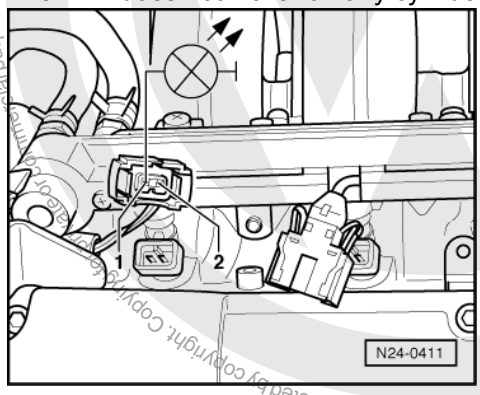

satelettronica
Volkswagen AG does not guarantee or accept any liability with respect to the correctness of information in this document. Copyright by Volkswagen AG.
Protected by copyright. Copying for private or commercial purposes, in part or in whole, is not permitted unless authorised by Volkswagen AG.

- -> Connect diode test lamp to Cyl. 1 connector, contact 1 and earth.
- Operate starter.
  The LED must light

If the LED does not light up:

- Check wire between 2 pin connector contact 1 and fuel pump relay (J17) for open circuit according to current flow diagram.
  Wire resistance: max. 1.5 ω

The LED flickers on one or several cylinders:

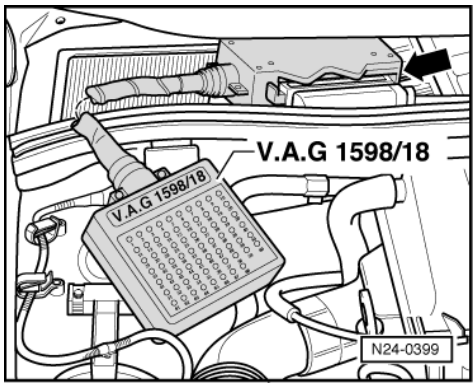

- -> Connect test box V.A.G 1598/18 to control unit wiring loom.
- Check wiring between test box and connectors of injectors for open circuit according to current flow diagram.
  Cyl. 1 connector, contact 2+socket 7
  Cyl. 2 connector, contact 2+socket 6
  Cyl. 3 connector, contact 2+socket 28
  Cyl. 4 connector, contact 2+socket 4
  Wire resistance: Max. 1.5 ω
- Additionally check wires for short to one another.
  Specification: ∞ω
- Check wiring between connector contacts 1 of injectors for open circuit.
  Wire resistance: Max. 1.5 ω

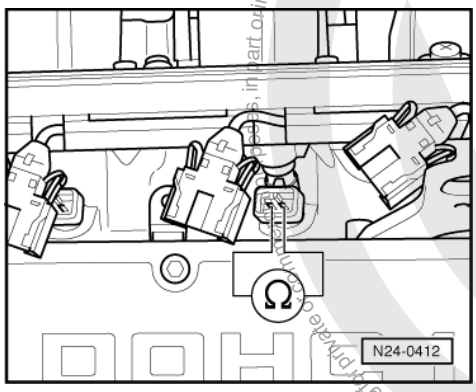

- Additionally check wires for short to one another.
  Specification: ∞ω

Checking resistance of injectors with wiring

- -> Check of resistance injectors between contacts.
  Specification: 14...17 ω

Checking spray pattern and for leaks

Special tools, testers, measuring instruments and auxiliary items required

- Adapter set V.A.G 1594
- Digital potentiometer V.A.G 1630

satelettronica
Copyright by Volkswagen AG. Volkswagen AG does not guarantee or accept any liability with respect to the correctness of information in this document. Copyright by Volkswagen AG.
Protected by copyright. Copying for private or commercial purposes, in part or in whole, is not permitted unless authorised by Volkswagen AG.

- Measuring container

Test sequence

- Pull 3 pin connector off ignition transformer.

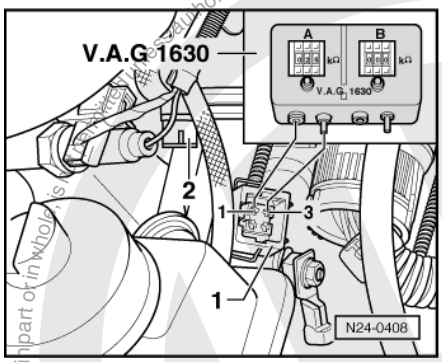

- -> Pull 4 pin connector -1- off coolant temperature sender (G62) -2-.
- Connect digital potentiometer V.A.G 1630 using aux. cables from V.A.G 1594 to connector contacts 1+3 and set connected side to 15 kω.
- Remove fuel rail complete with all injectors from intake manifold as follows (fuel hoses remain connected).
- Pull connector off sender for intake manifold pressure and intake air temperature.
- Pull vacuum hose off fuel pressure regulator.
- Unbolt fuel rail from intake manifold and pull out.

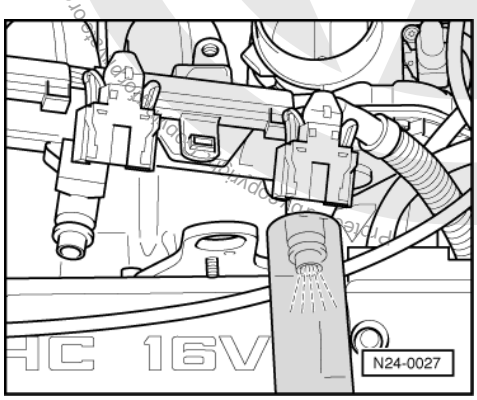

- -> Hold a small container under the injector to be checked and pull connectors off all other injectors.
- Operate starter, using a 2nd person. Injector must inject in two pulsating sprays.
- Repeat check with other injectors ensuring that injector to be checked is only connected.
- Switch off ignition and afterwards check injectors for leaks. No more than
  2 drops/min
  may leak from each injector.

Note:

When installing the injectors ensure that the O rings

are not damaged.

1.24 - Checking fuel pressure regulator and holding pressure

The fuel pressure regulator controls the fuel pressure dependent upon intake manifold pressure.

Special tools, testers, measuring instruments and auxiliary items required

- Pressure tester V.A.G 1318
- Adapter 1318/1

Copyright by Volkswagen AG. Volkswagen AG does not guarantee or accept any liability with respect to the correctness of information in this document. Copyright by Volkswagen AG.
satelettronica

- Adapter 1318/11

Test conditions

- Fuel pump delivery rate OK, checking delivery rate:

=> Repair group 20; Removing and installing parts of the fuel supply system; Checking fuel pump Removing and installing parts of the fuel supply system Checking fuel pump

Test sequence

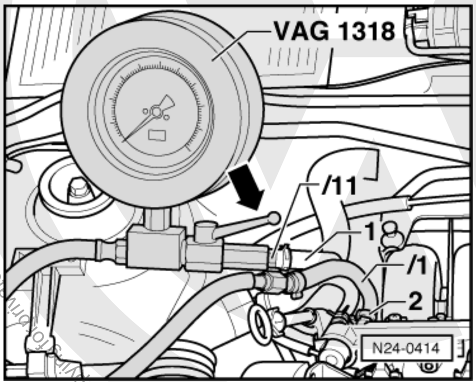

Warning!
Fuel system is under pressure! Before opening the system place a cloth around the connection. Then release pressure by carefully loosening the connection.

- -> Pull fuel supply hose (white marking) -1- off connection on fuel rail -2-.
- Connect pressure gauge V.A.G 1318 using adapter 1318/11 to hose and using adapter 1318/1 to connection on fuel rail.
- Open measured device cut-off tap. (The handle points in throughflow direction -arrow-).
- Start engine and run at idling speed.
- Check fuel pressure.
  Specification: Approx. 2.5 bar

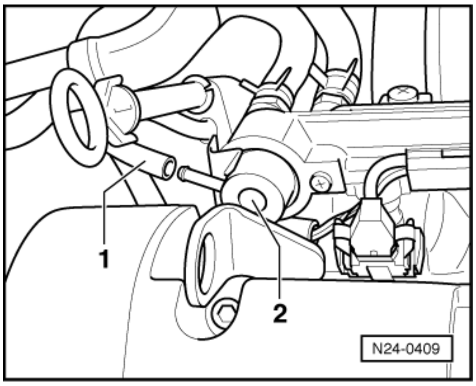

- -> Pull vacuum hose -1- from fuel pressure regulator off -2-. The fuel pressure must increase to Approx. 3.0 bar.
- Switch off ignition
- Check for leaks and holding pressure by watching pressure drop on gauge. After 10 minutes there must be a residual pressure of at least 2 bar.

If the holding pressure drops below 2 bar:

- Start engine and run at idling speed.
- When the pressure has built-up again, switch off ignition and at same time close gauge shut-off tap. The shut-off tap handle is at right-angles to through flow direction.

Protected by copyright. Copying for private or commercial purposes, in part or in whole, is not permitted unless authorised by Volkswagen AG. Volkswagen AG does not guarantee or accept any liability with respect to the correctness of information in this document. Copyright by Volkswagen AG.
satelettronica

- Observe pressure drop on gauge.

If the pressure does not drop:

- Check fuel pump non-return valve.

=> Repair group 20; Removing and installing parts of the fuel supply system; Checking fuel pump non-return valve. Removing and installing parts of the fuel supply system Checking fuel pump non-return valve.

If the pressure drops again:

- Open pressure gauge shut-off tap again.
- Start engine and run at idling speed.

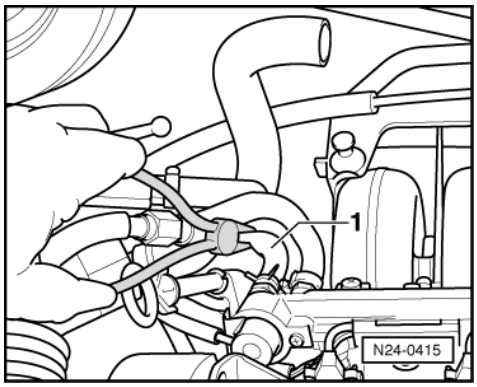

- -> When the pressure has built-up again, switch off ignition and at same time clamp off return supply hose (with blue markings) -1-.

If the pressure does not drop:

- Renew fuel pressure regulator
  =>Page 28 , item 5 .

If the pressure drops again:

- Check pipe connections, O-rings on fuel rail and injectors for leaks.
- Check pressure gauge for leaks.

Note:

Before removing pressure gauge place a cloth around the connections to be loosened.

1.25 - Checking intake air system for leaks (unmetered air)

Special tools, testers, measuring instruments and auxiliary items required

- Fault reader V.A.G 1551 or vehicle system tester V.A.G 1552 with cable V.A.G 1551/3
- Engine leak detector spray G 001 800 A1

Test sequence

Notes:

- The vacuum in the intake system will cause the leak detector spray to be drawn in with the unmetered air. The leak detector spray reduces the ignitability of the mixture. This leads to a drop in engine speed and to a change of Lambda probe reading.

satelettronica
Protected by copyright. Copying for private or commercial purposes, in part or in whole, is not permitted unless authorised by Volkswagen AG. Volkswagen AG does not guarantee or accept any liability with respect to the correctness of information in this document. Copyright by Volkswagen AG.

◆ The safety precautions listed on the container must be adhered to.

- Connect fault reader V.A.G 1551 (V.A.G 1552). Start engine and select "Address word" 01 of engine control unit. When doing this the engine must be running at idling speed.
  (Connecting fault reader and selecting engine control unit => Page 2 .)

-> Indicated on display:

```
Rapid data transfer      HELP
Select function XX
```

- Press keys 0 and 8 for the function "Read measured value block" and confirm entry with Q key.

-> Indicated on display:

```
Read measured value block      HELP
Input display group number XXX
```

- Press keys 0, 0 and 1 for "Display group number 1" and confirm entry with Q key.

-> Indicated on display:
(1...4 = Display zones)

```
Read measured value block      1
     1     2     3     4
```

- Note engine speed in display zone 1.
- Note Lambda probe voltage in display zone 3 and the area it fluctuates in.
- Systematically spray parts of the intake system with engine leak detector spray.

If the engine speed drops or the Lambda probe voltage changes:

- Press ⇒ key.
- Press keys 0 and 6 for the function "End output" and confirm entry with the Q key.
- Switch off ignition
- Check sprayed areas of intake system for leaks and rectify if necessary.

Engine speed or Lambda probe voltage does not change:

- Press ⇒ key.
- Press keys 0 and 6 for the function "End output" and confirm entry with the Q key.

1.26 - Checking intake air preheating

Checking regulating flap

- Remove air cleaner intake support.

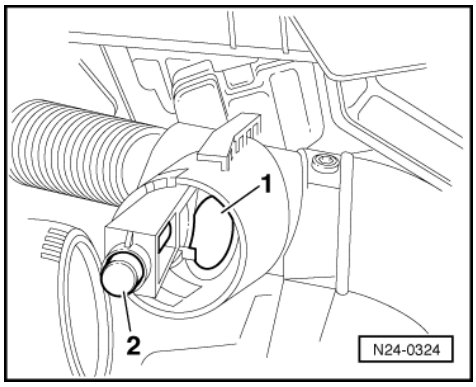

- -> Check control flap position -1-.
  - Above +23 °C flap must close warm air connection

Protected by copyright. Copyright by Volkswagen AG. Volkswagen AG does not guarantee or accept any liability with respect to the correctness of information in this document. Copyright by Volkswagen AG. Copyright. Copyright or private or commercial purposes in part or in whole is not permitted unless authorised by Volkswagen AG.
satelettronica

- Below +10 °C flap opens warm air connection

Note:

The function of the thermo element -2- can be checked easily by spraying with a commercial chilling agent.

1.27 - Wire routing engine wiring loom

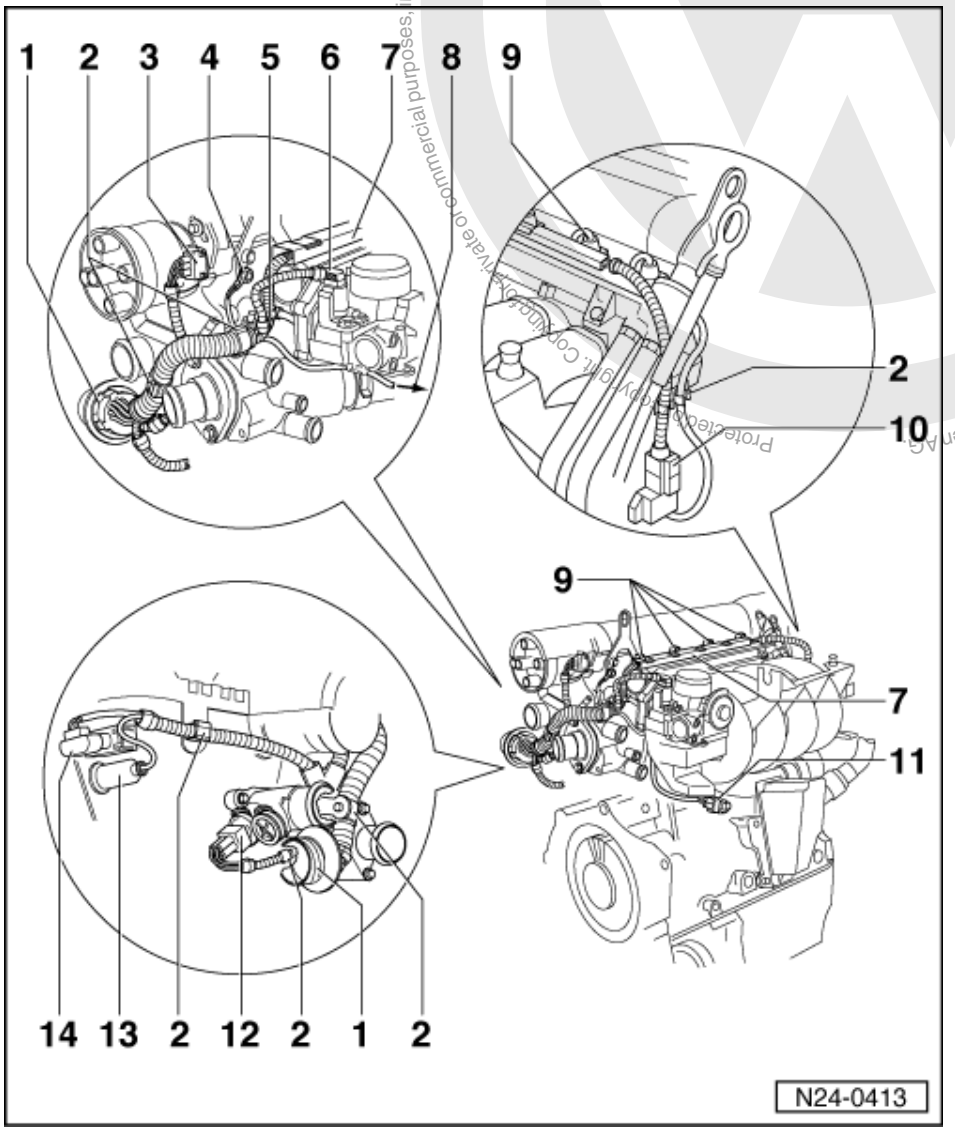

1 Central connector
2 Retaining clip
3 Hall sender (G40)
4 Earth connection
5 Distance piece
6 Throttle valve control part (J338)
7 Cable guide
8 To knock sensor - 11 -
9 Injectors (N30...N33)
10 Intake pipe pressure sender (G71) with intake air temperature sender (G42)

Protected by copyright. Copying for private or commercial purposes, in part or in whole, is not permitted unless authorised by Volkswagen AG. Volkswagen AG does not guarantee or accept any liability with respect to the correctness of information in this document. Copyright by Volkswagen AG
satelettronica

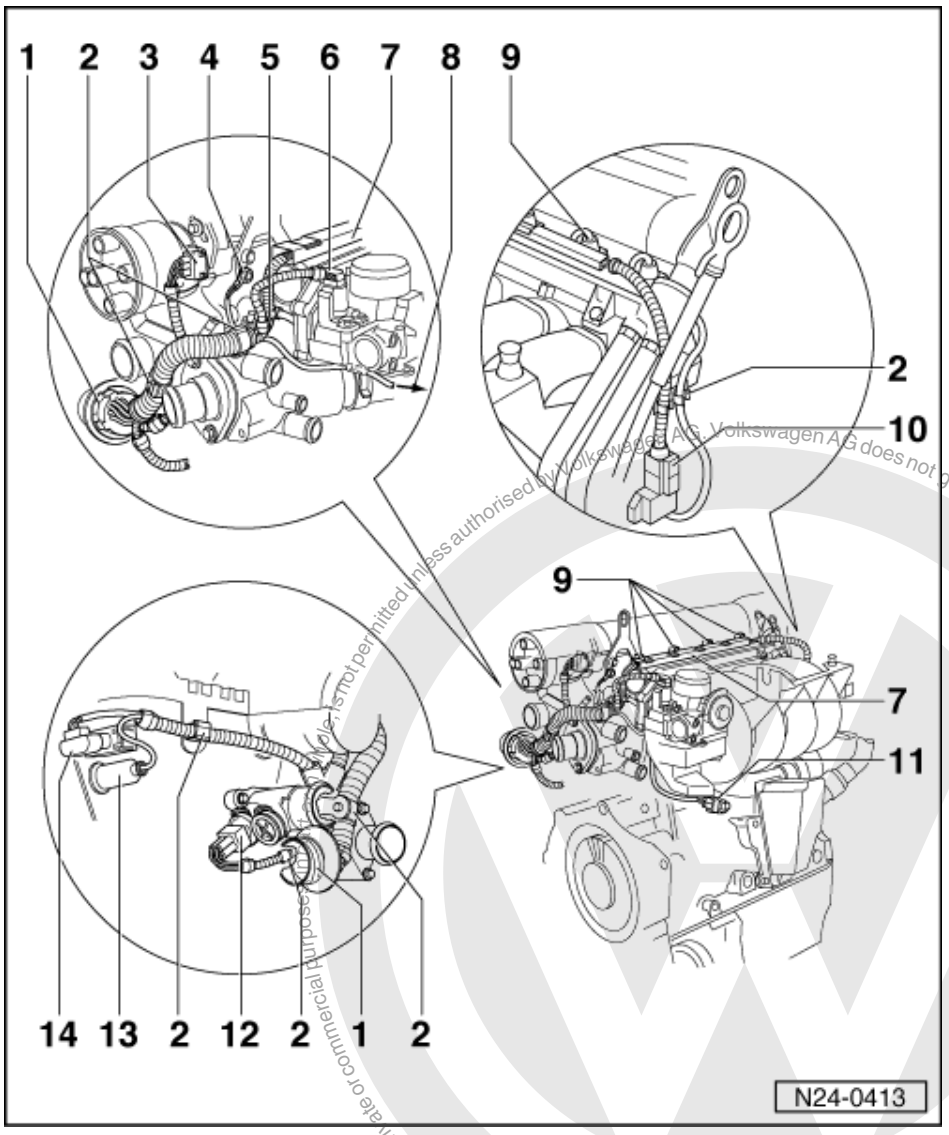

11 Knock sensor 1 (G61)

12 Coolant temperature sender (G62)

13 Oil pressure switch (F22)

14 Exhaust gas recirculation valve (N18)

- Two-way valve

Protected by copyright. Copying for private or commercial purposes, is not permitted unless authorised by Volkswagen AG. Volkswagen AG does not guarantee or accept any liability with respect to the correctness of information in this document. Copyright by Volkswagen AG.
satelettronica

28 - Ignition system

1 - Servicing ignition system

1.1 - Servicing ignition system

1.2 - General notes to ignition system

- Only the components which specifically relate to the ignition system are dealt with here. For the other components of the injection and ignition system => Repair group 24.
- Disconnecting and connecting the battery must only be done with the ignition switched off, otherwise the engine control unit could be damaged.
- The engine control unit is equipped with self diagnosis.
- Components marked with * are checked via the self diagnosis.
  => Page 3 , interrogating fault memory
- For trouble-free operation of the electrical components a voltage of at least 11.5 V is necessary.
- During some checks it is possible that the control unit will recognise and store a fault. Therefore after completing all checks and repairs the fault memory must be interrogated and if necessary erased.
  => Page 3 , interrogating and erasing fault memory

Safety precautions => Page 75

Test data, spark plugs => Page 75

Protected by copyright. Copying for private or commercial purposes, in part or in whole, is not permitted unless authorised by Volkswagen AG. Volkswagen AG does not guarantee or accept any liability with respect to the correctness of information in this document. Copyright by Volkswagen AG.
satelettronica

1.3 - Removing and installing parts of the ignition system

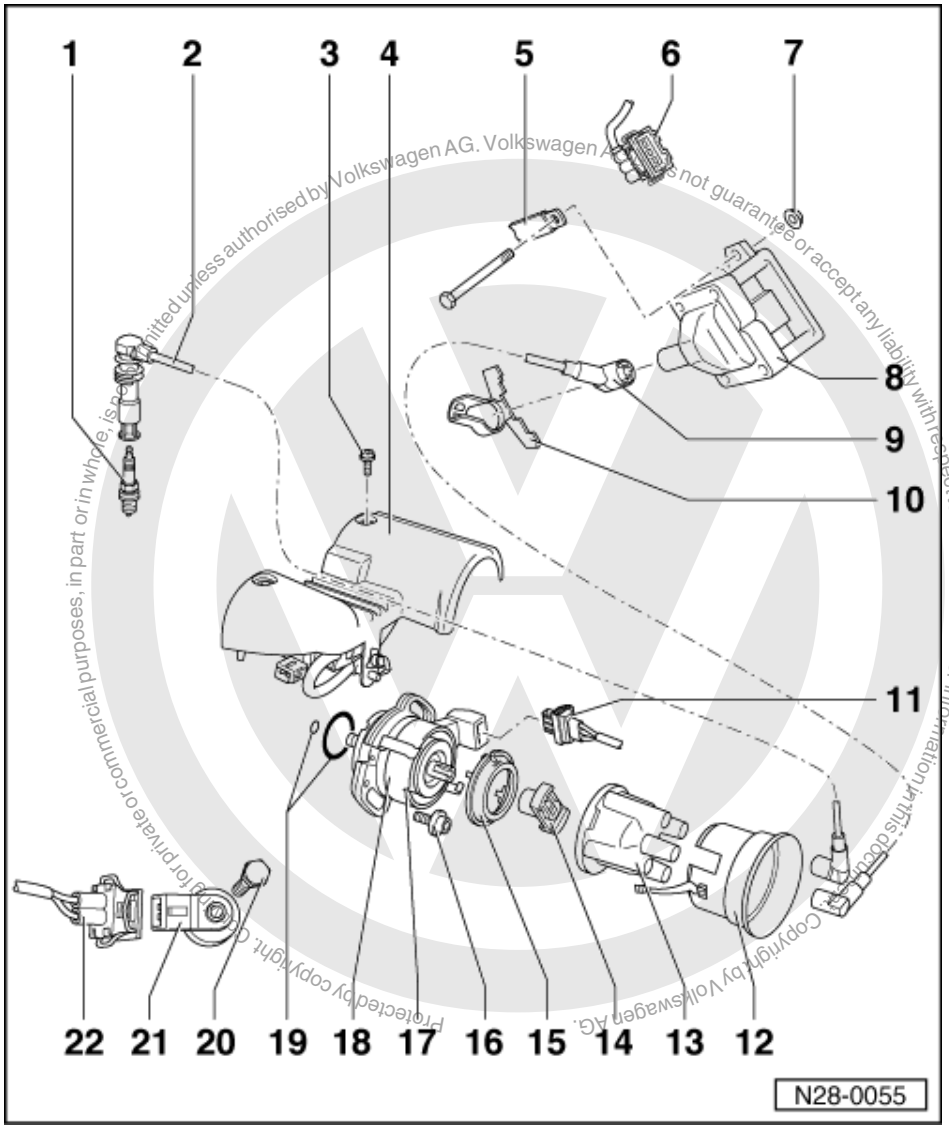

1 Spark plug, 30 Nm
- Type and electrode gap
  => Page 75

2 Ignition cable with spark plug connector and suppressor
- Renew complete ignition cable
- Resistance of complete wire
  4.6...7.4 kω

3 10 Nm
4 Cover
5 Earth strap
6 Connector
7 10 Nm
8 Ignition transformer (N152)
- With output stage (N157)
- Checking => Page 77

satelettronica

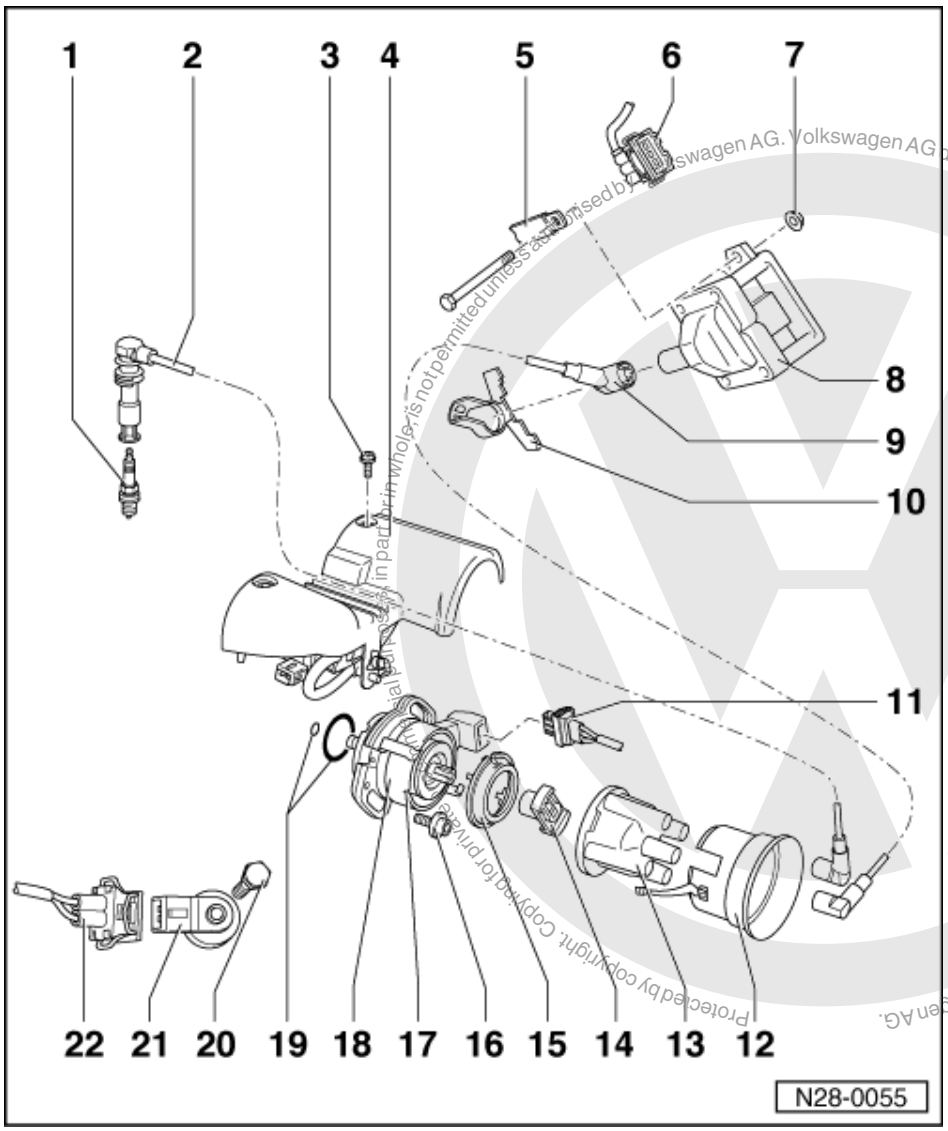

Protected by copyright. Copyright by Volkswagen AG.
Volkswagen AG does not guarantee or accept any liability with respect to the correctness of information in this document. Copyright by Volkswagen AG.
satelettronica

9 Ignition cable with suppressor connector
- Only renew complete ignition cable
- Resistance of complete wire
  1.2...2.8 kω

10 Rotating latch

11 Connector

12 Screening cap

13 Distributor cap
- Check for cracks and signs of tracking
- Check contact wear
- Clean before fitting
- Check carbon brush for wear and freedom of movement

14 Rotor arm
- Marking: R1
- 0.6...1.4 kω

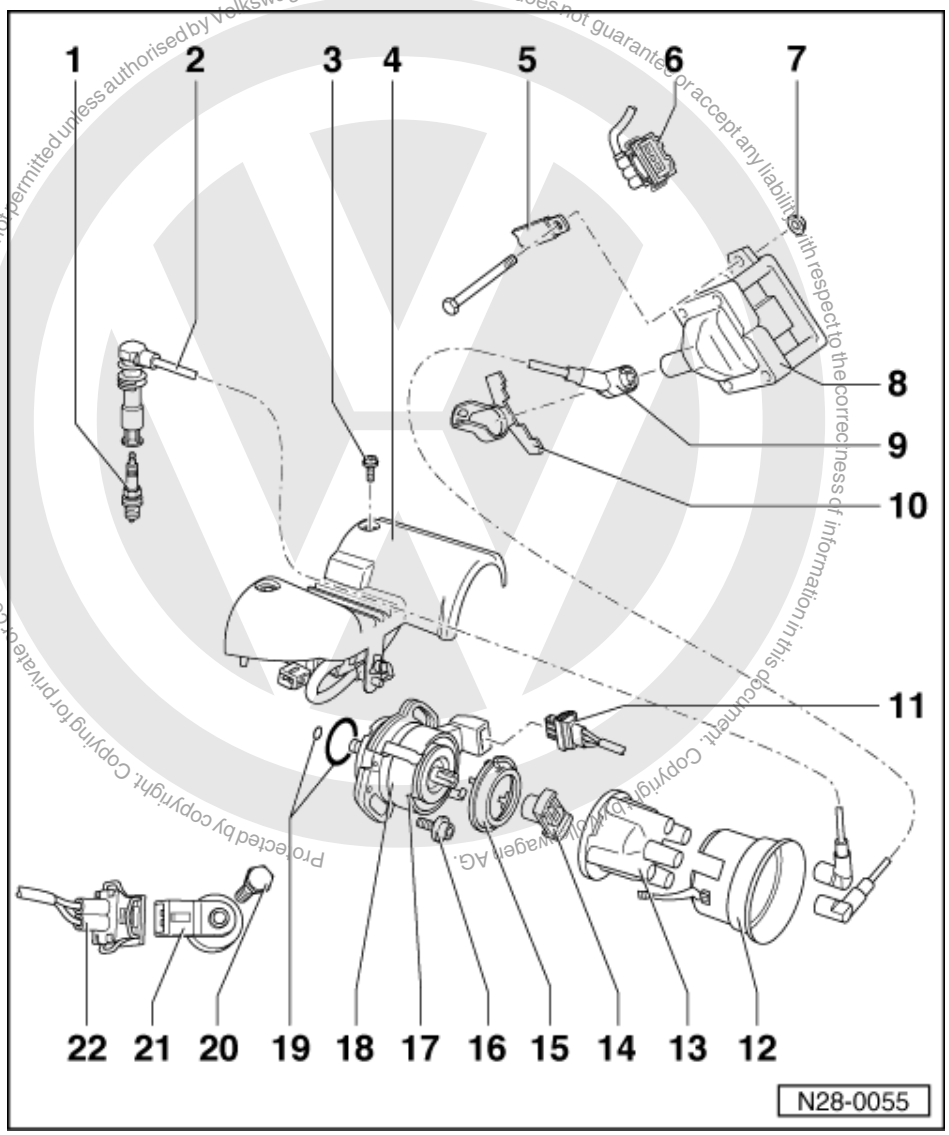

15 Dust cap
16 10 Nm
17 No. 1 Cyl. marking
18 Ignition distributor with Hall sender (G40)*
- Dismantling and assembling => Page 74
- Checking and adjusting ignition timing => Page 75
- Checking Hall sender => Page 76

19 O ring
- Renew if damaged

20 20 Nm
- Tightening torque influences the function of the knock sensor

21 Knock sensor 1 (G61)*
- Contacts gold plated

22 Connector
- Contacts gold plated

satelettronica

1.4 - Dismantling and assembling distributor

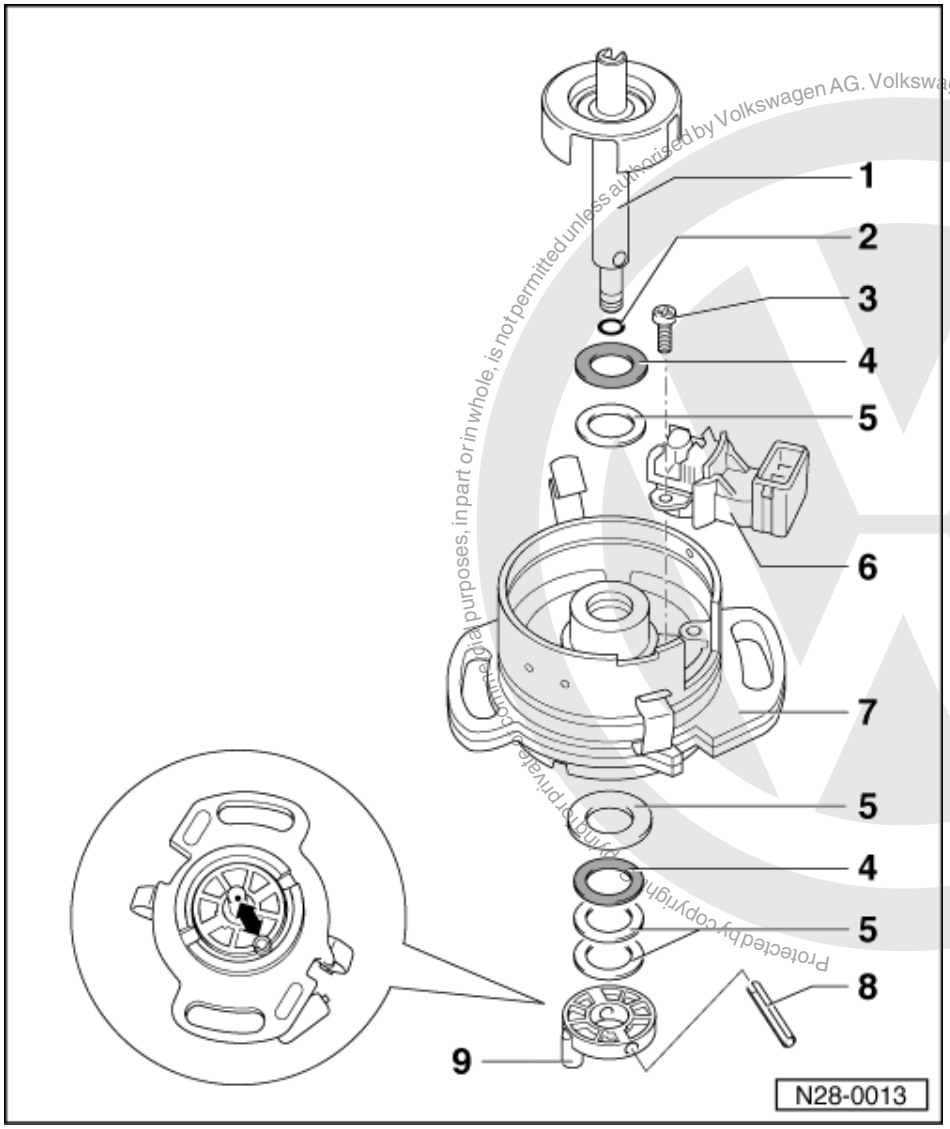

Protected by copyright. Copying for private or commercial purposes, in part or in whole, is not permitted unless authorised by Volkswagen AG. Volkswagen AG does not guarantee or accept any liability with respect to the correctness of information in this document. Copyright by Volkswagen AG.

satelettronica

1 Distributor shaft
- With Hall sender rotor
- Pull out after removing the spring pin -7-

2 O ring
- Renew if damaged

3 3 Nm

4 Plastic washer

5 Shim(s)

6 Hall sender (G40)
- Checking => Page 76

7 Distributor body

8 Spring pin

9 Coupling
- Before removing mark position of drive tongue to shaft - 1 -

Protected by copyright. Copying for private or commercial purposes, in part or in whole, is not permitted unless authorised by Volkswagen AG. Volkswagen AG does not guarantee or accept any liability with respect to the correctness of information in this document. Copyright by Volkswagen AG.

1.5 - Safety precautions

To prevent injuries to persons and/or damage to the injection and ignition system, the following must be observed:

- Do not touch or pull off ignition wiring when engine is running or turning at starter speed.
- The ignition must be switched off when disconnecting or connecting injection and ignition system wiring as well as test instrument cables.
- If the engine is to be turned at starter speed, without starting, e.g. when checking compressions, pull plug off Hall sender (distributor).
- Do not connect a capacitor to terminal 1 (-).
- Do not replace 1 kω (identification: R1) with a different type even for radio interference suppression.
- For suppression purposes only 1 kω resistances are to be used on the H.T. leads and 5 kω spark plug connectors.

1.6 - Adjustment data, Spark plugs

Engine code	AFH
Ignition timing1)	
Test value	3...8 °BTDC
Adjusting value	6±1 °BTDC
Speed	1100...1500 rpm2)
Ignition timing	1-3-4-2
Spark plugs1)	
VW/Audi	101 000 033 AF
Manufacturer's designation	BKUR 6 ET
Electrode gap	0.7...0.9 mm
Tightening torque	30 Nm

1) The up-to-date figures and the spark plug change intervals:
=> Exhaust emissions test binder
2) The rpm is increased by the 1AV control unit in "04 basic setting" function.

1.7 - Checking and adjusting ignition timing

Special tools, testers, measuring instruments and auxiliary items required

- Fault reader V.A.G 1551 or vehicle system tester V.A.G 1552 with cable V.A.G 1551/3
- Ignition tester V.A.G 1767 or V.A.G 1367 with HT pick-up clamp V.A.G 1367/8

Check conditions

- Coolant temperature at least 80 °C
- No faults must be stored in fault memory
  => Page 3 , interrogating fault memory

Test sequence

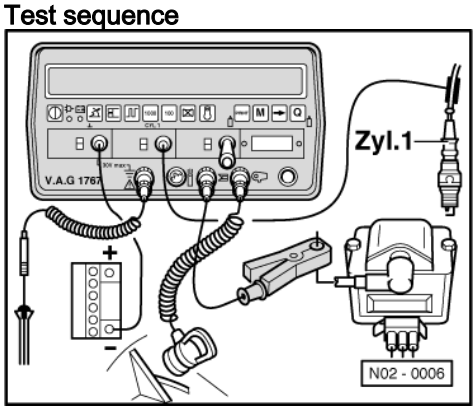

satelettronica

- -> Connect ignition tester V.A.G 1767 or ignition tester V.A.G 1367 with HT pick-up clamp V.A.G 1367/8.
- Connect fault reader V.A.G 1551 (V.A.G 1552). Start engine and select "Address word" 01 of engine control unit. When doing this the engine must be running at idling speed.
  (Connecting fault reader and selecting engine control unit => Page 2 .)

-> Indicated on display:

```
Rapid data transfer     HELP
Select function XX
```

- Press keys 0 and 4 for the function "Introduction of basic setting" and confirm entry with Q key.

-> Indicated on display:

```
Basic setting     HELP
Input display group number XXX
```

- Press keys 0, 0 and 1 for "Display group number 1" and confirm entry with Q key.

-> Indicated on display:
(1...4 = Display zones)

```
System in basic setting 1
     1     2     3     4
```

Do not continue with check until an 8 digit number block 00000000 appears in the 4th display zone.

Note:

If at one or more positions a 1 is displayed in display zone 4, the test conditions have not been fulfilled:

=>Page 16 ; Relevance of figures in 8 digit number block

- The engine control unit raises the idling speed to 1100...1500 rpm.
- Check ignition timing.
  Specification: 3...8 ° before TDC1)
- Adjust ignition timing by turning distributor, if necessary.
  Adjustment figure: 6±1 ° before TDC1)

1) Up-to-date specifications:

=> Emissions test binder

- Press ⇒ key.
- Press keys 0 and 6 for the function "End output" and confirm entry with the Q key.

1.8 - Checking Hall sender

Special tools, testers, measuring instruments and auxiliary items required

- Test box V.A.G 1598/18
- Hand multimeter V.A.G 1526 or multimeter V.A.G 1715
- Adapter set V.A.G 1594
- Current flow diagram

Test conditions

- If a fault on Hall sender is recognised by self diagnosis.

Test sequence

- Pull connector off Hall sender connector on distributor.

Protected by copyright. Copyright by Volkswagen AG. Copying for private or commercial purposes, in part or in whole, is not permitted unless authorised by Volkswagen AG. Volkswagen AG does not guarantee or accept any liability with respect to the correctness of information in this document.
satelettronica

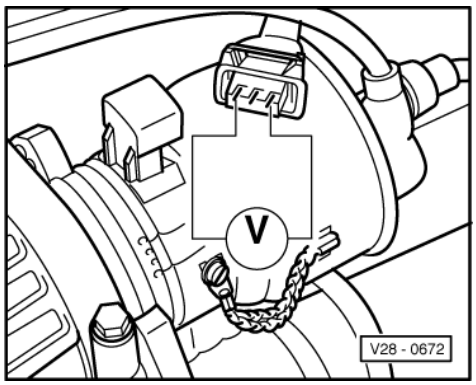

- -> Connect multimeter to measure voltage using aux. cables from V.A.G 1594 to the outer contacts of the connector.
- Switch on ignition.
  Specification: min. 9 V
- Switch off ignition

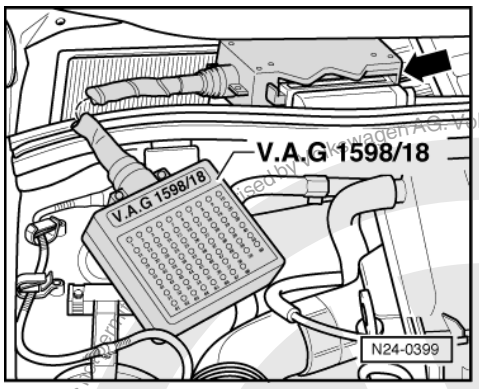

- -> Connect test box V.A.G 1598/18 to control unit wiring loom.
- Check wiring between test box and connector for open circuit according to current flow diagram.
  Contact 1+socket 17
  Contact 2+socket 13
  Contact 3+socket 8
  Wire resistance: Max. 1.5 ω
- Additionally check wires for short to one another.
  Specification: ∞ω

If no wiring fault is detected and voltage was present between contacts 1+3:

- Renew Hall sender => Page 74 , item 6 .

If no wiring fault is detected and no voltage was present between contacts 1+3:

- Renew engine control unit
  => Page 26 , item 29

1.9 - Checking ignition transformer and output stage

Special tools, testers, measuring instruments and auxiliary items required

- Test box V.A.G 1598/18
- Hand multimeter V.A.G 1526 or multimeter V.A.G 1715
- Adapter set V.A.G 1594
- Diode test lamp V.A.G 1527
- Current flow diagram

Protected by copyright. Copying for private or commercial purposes, in part or in whole, is not permitted unless authorised by Volkswagen AG. Volkswagen AG does not guarantee or accept any liability with respect to the correctness of information in this document. Copyright by Volkswagen AG.
satelettronica

Check conditions

- Hall sender in distributor must be OK.

Checking ignition transformer

- Pull connector and H.T. cable off ignition transformer (N152).

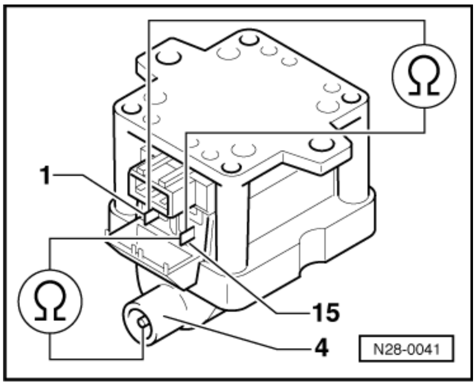

- -> Check primary resistance between terminals 1 and 15.
  Specification: 0.5...1.5 ω
- Check secondary resistance between terminals 4 and 15.
  Specification: 2.5...4 kω

If the specifications are not attained:

- Renew ignition transformer => Page 71 , item 8 .

Checking voltage supply

- Pull 3 pin connector off ignition transformer.

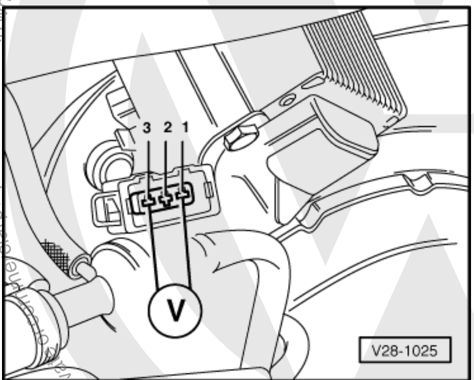

- -> Connect multimeter to measure voltage with aux. cables from V.A.G 1594 to the contacts 1+3 of the disconnected plug.
- Switch ignition on.
  Specification: at least 11 V

If no voltage is present:

- Switch off ignition
- Check wire between 3 pin connector contact 1 and earth for open circuit according to current flow diagram.
  Wire resistance: Max. 1.5 ω
- Check wire between 3 pin connector contact 3 and relay plate for open circuit according to current flow diagram.
  Wire resistance: Max. 1.5 ω

Protected by copyright. Copying for private or commercial purposes, in part or in whole, is not permitted unless authorised by Volkswagen AG. Volkswagen AG does not guarantee or accept any liability with respect to the correctness of information in this document. Copyright by Volkswagen AG.

sateletronica

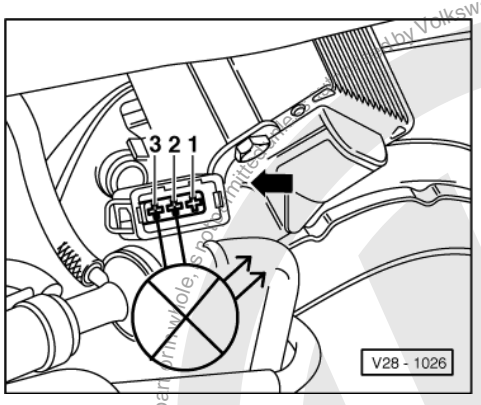

Checking activation

- Pull connector off injectors.
- -> Connect diode test lamp V.A.G 1527 using aux. cables from V.A.G 1594 and adapters V.A.G 1594/15 to contacts 2+3 of the connector.
- Operate starter and check ignition signal from engine control unit.
  LED must flicker

The LED does not flicker:

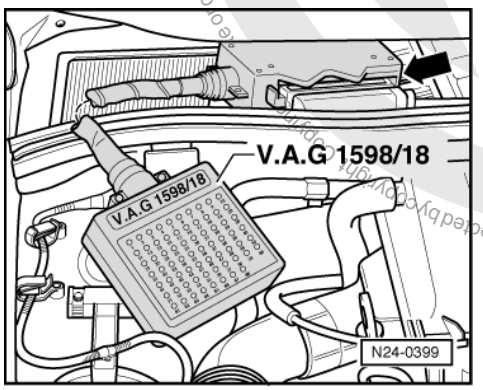

- -> Connect test box V.A.G 1598/18 to control unit wiring loom.
- Check wire between test box socket 24+3 pin connector contact 2 for open circuit according to current flow diagram.
  Wire resistance: Max. 1.5 ω
- Additionally check wires for short to one another.
  Specification: ∞ω

If no wiring fault is detected and voltage was present between contacts 1+3:

- Renew engine control unit
  => Page 26 , item 29

If the voltage supply and activation is OK.:

- Connect 3 pin connector and H.T. cable to ignition transformer.

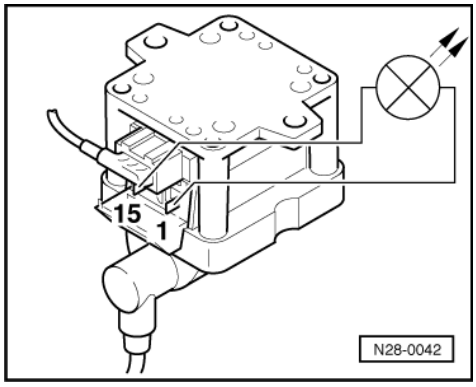

Protected by copyright. Copyright by Volkswagen AG. Volkswagen AG does not guarantee or accept any liability with respect to the correctness of information in this document.
satelettronica

- -> Connect diode test lamp using aux. cables and clamps to the contacts 1 and 15 on ignition transformer.

Warning!
During the following test do not touch the terminals of the ignition transformer or test cables.

- Operate starter.
  The LED must flicker

1.10 - Checking knock sensor

Special tools, testers, measuring instruments and auxiliary items required

- Test box V.A.G 1598/18
- Hand multimeter V.A.G 1526 or multimeter V.A.G 1715
- Adapter set V.A.G 1594
- Current flow diagram

Test conditions

- Self-diagnosis has recognized a fault on knock sensor.

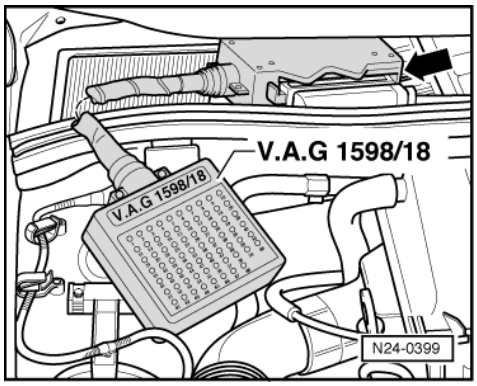

Test sequence

- -> Connect test box V.A.G 1598/18 to control unit wiring loom.
- Check wiring and knock sensor for short circuit.
  Sockets: 19+39, 39+45, 19+45
  Specification: ∞ω

If no short is detected:

- Remove starter.

=> Repair group 27; Removing and installing starter Removing and installing starter

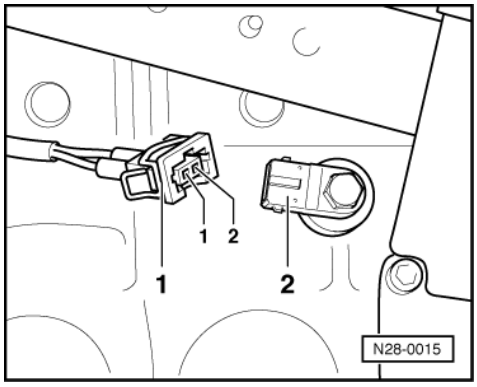

Protected by copyright. Copying for private or commercial purposes, in part or in whole, is not permitted unless authorised by Volkswagen AG. Volkswagen AG does not guarantee or accept any liability with respect to the correctness of information in this document. Copyright by Volkswagen AG.
satelettronica

- -> Pull connector -1- off knock sensor 1 (G61) -2-.
- Check wiring between test box and knock sensor for open circuit according to current flow diagram.
  Contact 1+socket 39
  Contact 2+socket 19
  Wire resistance: Max. 1.5 ω
- Measure resistance between knock sensor contacts.
  Specification ∞ω

If no wiring fault is detected:

- Loosen knock sensor and tighten again to 20 Nm.
- Carry out test drive.

  During the road test the following operating conditions must be fulfilled:
  - The coolant temperature must exceed 80 °C .
  - When the temperature is reached, the operating conditions
    Idling
    Part throttle
    Full throttle
    Overrun
    must be attained several times.
  - At full throttle the speed must exceed 3500 rpm.

- Again interrogate the control unit fault memory.

If the fault is still present:

- Replace knock sensor
  =>Page 73 , item 21 .

Protected by copyright. Copying for private or commercial purposes, in part or in whole, is not permitted unless authorised by Volkswagen AG. Volkswagen AG does not guarantee or accept any liability with respect to the correctness of information in this document. Copyright by Volkswagen AG.
satelittrica